SUBARU

LEGACY

/including OUTBACK & SUS SPORT UTILITY SEDAN

1999 OWNER'S MANUAL

Wear Seat Belts at All Times for Your Own Safety.

Downloaded from www.Manualslib.com manuals search engine

Warranties

■ Warranties for U.S.A.

All SUBARU vehicles distributed by Subaru of America, Inc. and sold at retail by an authorized SUBARU dealer in the continental U.S., Alaska and Hawaii come with the following warranties:

- SUBARU Limited Warranty
- Emission Control Systems Warranty
- Emissions Performance Warranty

All warranty information, including details of coverage and exclusions, is in the Warranty and Maintenance Booklet. Please read these warranties carefully.

■ Warranties for Canada

All SUBARU vehicles distributed by Subaru Canada, Inc. and sold at retail by an authorized SUBARU dealer in Canada come with the following warranties:

- SUBARU Limited Warranty
- Anti-Corrosion Warranty
- Emission Control Warranty

All warranty information, including details of coverage and exclusions, is in the Warranty and Service Booklet. Please read these warranties carefully.

Downloaded from www.Manualslib.com manuals search engine

How to use this owner's manual

■ Using your Owner's manual

Before you operate your vehicle, carefully read this manual. To protect yourself and extend the service life of your vehicle, follow the instructions in this manual. Failure to observe these instructions may result in serious injury and damage to your vehicle.

This manual is composed of thirteen chapters. Each chapter begins with a brief table of contents, so you can usually tell at a glance if that chapter contains the information you want.

Chapter 1: Doors and Locks
This chapter informs you how to operate the keys, locks and windows.
Chapter 2: Seat, seat belt and SRS AIRBAG
This chapter informs you how to use the seat and seat belt and contains precautions for the SRS AIRBAG.
Chapter 3: Instruments and controls
This chapter informs you about the operation of instrument panel indicators and how to use the instruments and other switches.
Chapter 4: Climate Control
This chapter informs you how to operate the climate control.
Chapter 5: Audio
This chapter informs you how to operate your audio system.
Chapter 6: Interior equipment
This chapter informs you how to operate interior equipment.
Chapter 7: Starting and operating
This chapter informs you how to start and operate your SUBARU.
Chapter 8: In case of emergency
This chapter informs you what to do if you have a problem while driving, such as a flat tire or engine overheating.
Chapter 9: Appearance care
This chapter informs you how to keep your SUBARU looking good.
Chapter 10: Maintenance and service
This chapter informs you how to keep your SUBARU running properly.

Downloaded from www.Manualslib.com manuals search engine

Chapter 11: Specifications
This chapter informs you about dimension and capacities of your SUBARU.
Chapter 12: Consumer information and Reporting safety defects
This chapter informs you about Uniform tire quality grading standards and Reporting safety defects.
Chapter 13: Index
This is an alphabetical listing of all that's in this manual. You can use it to quickly find something you want to read.

■ Safety warnings

You will find a number of WARNINGs, CAUTIONs and NOTEs in this manual.
These safety warnings alert you to potential hazards that could result in injury to you or others.
Please read these safety warnings as well as all other portions of this manual carefully in order to gain a better understanding of how to use your SUBARU vehicle safely.

⚠ WARNING
A WARNING indicates a situation in which serious injury or death could result if the warning is ignored.

⚠ CAUTION
A CAUTION indicates a situation in which injury or damage to your vehicle, or both, could result if the caution is ignored.

NOTE
A NOTE gives information or suggestions how to make better use of your vehicle.

– CONTINUED –

Downloaded from www.Manualslib.com manuals search engine

■ Safety symbol

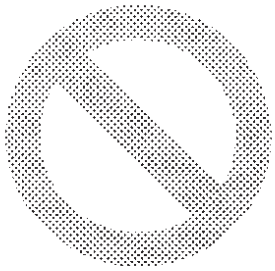

HS0008

You will find a circle with a slash through it in this manual. This symbol means “Do not”, “Do not do this”, or “Do not let this happen”.

Safety precautions when driving

SEAT BELT AND SRS AIRBAG

⚠ WARNING

● All persons in the vehicle should fasten their seat belts BEFORE the vehicle starts to move. Otherwise, the possibility of serious injury becomes greater in the event of a sudden stop or accident.

● To obtain maximum protection in the event of an accident, the driver and all passengers in the vehicle should always wear seat belts when the vehicle is moving. The SRS (Supplemental Restraint System) AIRBAG does not do away with the need to fasten seat belts. In combination with the seat belts, it offers the best combined protection in case of a serious accident.

Not wearing a seat belt increases the chance of severe injury or death in a crash even when the car has the SRS AIRBAG.

● The SRS AIRBAGs deploy with considerable speed and force. Occupants who are out of proper position when the SRS AIRBAG deploys could suffer very serious injuries. Because the SRS

Downloaded from www.Manualslib.com manuals search engine

AIRBAG needs enough space for deployment, the driver should always sit upright and well back in the seat as far from the steering wheel as practical while still maintaining full vehicle control and the front passenger should move the seat as far back as possible and sit upright and well back in the seat.

Carefully read the sections 3-point Type Seat Belts, 2-point Type Seat Belts and SRS AIRBAG in chapter 2 of this owner's manual for instructions and precautions concerning the seat belt system and SRS AIRBAG system.

CHILD SAFETY

⚠ WARNING

- **Never hold a child on your lap or in your arms while the vehicle is moving. The passenger cannot protect the child from injury in a collision, because the child will be caught between the passenger and objects inside the vehicle.**
- **While riding in the vehicle, infants and small children should always be placed in an infant or child restraint system in the REAR seat which is appropriate for the child's age, height and weight. If a child is too big for a child restraint system, the child should sit in the REAR seat and be restrained using the seat belts. According to accident statistics, children are safer when properly restrained in the rear seating positions than in the front seating positions. Never allow a child to stand up or kneel on the seat.**
- **Put children aged 12 and under in the REAR seat properly restrained at all times in a child restraint device or in a seat belt. The SRS AIRBAG deploys with considerable speed and force and can injure or even kill children, especially if they are 12 years of age and under and are not restrained or improperly restrained. Because children are lighter and weaker than adults, their risk being injured from deployment is greater.**
- **NEVER INSTALL A REARWARD FACING CHILD SEAT IN THE FRONT SEAT. DOING SO RISKS SERIOUS INJURY OR DEATH TO**

– CONTINUED –

Downloaded from www.Manualslib.com manuals search engine

THE CHILD BY PLACING THE CHILD'S HEAD TOO CLOSE TO THE SRS AIRBAG.

- **Always use the child safety locks whenever a child rides in the rear seat. Serious injury could result if a child accidentally opened the door and fell out. Refer to the Door Lock section in chapter 1.**
- **Always lock the passenger's windows using the lock switch when children are riding in the vehicle. Failure to follow this procedure could result in injury to a child operating the power window. Refer to the Power Window section in chapter 1.**
- **Never leave unattended children in the vehicle. They could accidentally injure themselves or others through inadvertent operation of the vehicle. Also, on hot or sunny days, temperature in a closed vehicle could quickly become high enough to cause severe or possibly fatal injuries to them.**

Carefully read the sections Child Restraint System, SRS AIRBAG, 3-point Type Seat Belts and 2-point Type Seat Belts in chapter 2 of this owner's manual for instructions and precautions concerning the child restraint system, seat belt system and SRS AIRBAG system.

ENGINE EXHAUST GAS (CARBON MONOXIDE)

⚠ WARNING

- **Never inhale engine exhaust gas. Engine exhaust gas contains carbon monoxide, a colorless and odorless gas which is dangerous, or even lethal, if inhaled.**
- **Always properly maintain the engine exhaust system to prevent engine exhaust gas from entering the vehicle.**
- **Never run the engine in a closed space, such as a garage, except for the brief time needed to drive the vehicle in or out of it.**
- **Avoid remaining in a parked vehicle for a lengthy time while the engine is running. If that is unavoidable, then use the ventilation fan to force fresh air into the vehicle.**
- **Always keep the front ventilator inlet grille free from snow, leaves or other obstructions to ensure that the ventilation system always works properly.**

Downloaded from www.Manualslib.com manuals search engine

- **If at any time you suspect that exhaust fumes are entering the vehicle, have the problem checked and corrected as soon as possible. If you must drive under these conditions, drive only with all windows fully open.**
- **Keep the trunk lid or rear gate closed while driving to prevent exhaust gas from entering the vehicle.**

DRINKING AND DRIVING

⚠ WARNING

Drinking and then driving is very dangerous. Alcohol in the bloodstream delays your reaction and impairs your perception, judgment and attentiveness. If you drive after drinking – even if you drink just a little – it will increase the risk of being involved in a serious or fatal accident, injuring or killing yourself, your passengers and others. In addition, if you are injured in the accident, alcohol may increase the severity of that injury.
Please don't drink and drive.

Drunken driving is one of the most frequent causes of accidents. Since alcohol affects all people differently, you may have consumed too much alcohol to drive safely even if the level of alcohol in your blood is below the legal limit. The safest thing you can do is never drink and drive. However if you have no choice but to drive, stop drinking and sober up completely before getting behind the wheel.

DRUGS AND DRIVING

⚠ WARNING

There are some drugs (over the counter and prescription) that can delay your reaction time and impair your perception, judgment and attentiveness. If you drive after taking them, it may increase your, your passengers' and other persons' risk of being involved in a serious or fatal accident.

– CONTINUED –

Downloaded from www.Manualslib.com manuals search engine

If you are taking any drugs, check with your doctor or pharmacist or read the literature that accompanies the medication to determine if the drug you are taking can impair your driving ability. Do not drive after taking any medications that can make you drowsy or otherwise affect your ability to safely operate a motor vehicle. If you have a medical condition that requires you to take drugs, please consult with your doctor.

Never drive if you are under the influence of any illicit mind-altering drugs. For your own health and well-being, we urge you not to take illegal drugs in the first place and to seek treatment if you are addicted to those drugs.

DRIVING WHEN TIRED OR SLEEPY

⚠ WARNING

When you are tired or sleepy, your reaction will be delayed and your perception, judgment and attentiveness will be impaired. If you drive when tired or sleepy, your, your passengers' and other persons' chances of being involved in a serious accident may increase.

Please do not continue to drive but instead find a safe place to rest if you are tired or sleepy. On long trips, you should make periodic rest stops to refresh yourself before continuing on your journey. When possible, you should share the driving with others.

CAR PHONES AND DRIVING

⚠ CAUTION

A driver's use of a car phone can be distracting and if special care is not taken, can lead to an accident. If you use a car phone while driving, make an extra effort to pay attention to the road and to traffic at all times.

Downloaded from www.Manualslib.com manuals search engine

MODIFICATION OF YOUR VEHICLE

⚠ CAUTION

Your vehicle should not be modified. Modification could affect its performance, safety or durability, and may even violate governmental regulations. In addition, damage or performance problems resulting from modification may not be covered under warranties.

DRIVING WITH PETS

Unrestrained pets can interfere with your driving and distract your attention from driving. In a collision or sudden stop, unrestrained pets or cages can be thrown around inside the vehicle and hurt you or your passengers. Besides, the pets can be hurt under these situations. It is also for their own safety that pets should be properly restrained in your vehicle. Restrain a pet with a special traveling harness which can be secured to the rear seat with a seat belt or use a pet carrier which can be secured to the rear seat by routing a seat belt through the carrier's handle. Never restrain pets or pet carriers in the front passenger's seat. For further information, consult your veterinarian, local animal protection society or pet shop.

IMPORTANT NOTE FOR RIGHT HAND DRIVE LEGACY

RIGHT HAND DRIVE LEGACY AWD STATION WAGONS are designed for use as postal delivery vehicles only. Since the average driver may not be accustomed to operating a right hand drive car, we urge you to take the time to acquaint yourself with the differences involved in operating this kind of vehicle.

Downloaded from www.Manualslib.com manuals search engine

Table of contents

Doors and locks	*1*
Seat, seatbelt and SRS AIRBAG	*2*
Instruments and controls	*3*
Climate control	*4*
Audio	*5*
Interior equipment	*6*
Starting and operating	*7*
In case of emergency	*8*
Appearance care	*9*
Maintenance and service	*10*
Specifications	*11*
Consumer information and Reporting safety defects	*12*
Index	*13*

Downloaded from www.Manualslib.com manuals search engine

A

ABS (Anti-Lock Brake system) 7-33
ABS warning light 3-10
Accesary power socket 6-9
AIRBAG 2-31
Precautions against vehicle modification 2-41
SRS AIRBAG system operation 2-35
System monitors 2-39
System servicing 2-40
Vehicle with driver's and front passenger's SRS AIRBAGs and lap/shoulder restraints 2-31
AIRBAG warning light 3-7
Air conditioner (Heating and air conditioning) 4-3
Air conditioner (for right hand drive vehicles only) 4-14
Air cleaner element (Replacement) 10-20
All wheel drive vehicles (Driving tips for AWD vehicles) 7-35
Aluminum wheels (If equipped) (Maintenance) 10-48
Aluminum wheels (If equipped) (Cleaning) 9-7
AM/FM stereo radio with cassette player (if equipped) 5-5, 5-18
RADIO OPERATION (for radio with weather band) 5-5
RADIO OPERATION (for radio without weather band) 5-10, 5-18
CASSETTE PLAYER OPERATION 5-14, 5-24
CLOCK FUNCTION 5-16, 5-26
AM/FM/WB stereo radio with cassette player and conpactdisc player (if equipped) 5-27
RADIO OPERATION 5-27
CASSETTE PLAYER OPERATION 5-34
CONPACT DISC PLAYER OPERATION 5-38
CD CHANGER CONTROL 5-42
CLOCK FUNCTION 5-45
Antenna 5-4
Anti-lock brake system 7-33
Anti-theft system 1-17
Ashtray 6-8
AT OIL TEMPerature warning light 3-11
Automatic transmission 7-18

Downloaded from www.Manualslib.com manuals search engine

Driving tips 7-21
Maximum speeds 7-21
Selector lever 7-19
Shift lock release 7-21
Automatic transmission fluid(Maintenance) 10-25

B

Back-up light (Rear combination lights, Bulb replacement) 10-59
Battery (Maintenance) 10-36
Brake (Tips for using brakes) 7-31
Brake booster(Maintenance) 10-35
Brake fluid(Maintenance) 10-32
Brake system warning light 3-8
Brake pedal (Maintenance) 10-40
Brake pad and lining(Maintenance) 10-43
Break-in (New vehicle break-in driving) 7-3
Bulb chart 11-10
Bulb replacement 10-54

C

Carbon monoxide (Engine exhaust gas) 7-7
Cargo anchorage eyelets 6-15
Cargo area cover(Luggage cover) 6-14
Cargo hooks (Cargo anchorage eyelest) 6-15
Cargo room light (Luggage area light) 6-13
Car phones and driving viii
Cassette player operation 5-14, 5-24, 5-34
Catalytic converter 7-8
CD player operation 5-38
CD changer control 5-42
Center console 6-4
Charge warning light 3-8
CHECK ENGINE warning light/Malfunction indicator lamp 3-9
Child restraint system 2-25
Installing child restraint systems in the 3-point type seat belt position 2-28

Downloaded from www.Manualslib.com manuals search engine

Installing child restraint systems in the 2-point type seat belt position 2-27
Top strap anchors 2-29
Child safety v
Cigarette lighter (option) 6-7
Cleaning aluminum wheels 9-7
Cleaning the interior 9-5
Leather seat materials 9-6
Seat fablic 9-5
Synthetic leather upholstery 9-6
Clock function 5-16, 5-26, 5-45
Clutch fluid(Maintenance) 10-34
Clutch pedal (Manual transmission) (Maintenance) 10-41
Combination meter 3-4
Compact disk player operation 5-38
Console (center console) 6-4
Coolant (Engine coolant) 10-14
Corrosion protection 9-4
Cruise control (if equipped) 7-24
To change the cruising speed 7-25
To set cruise control 7-24
To temporarily cancel the cruise control 7-25
To turn off the cruise control 7-25
Cup holder 6-5

D

Defogging (Windshield) 4-6, 4-16
Defogging (Rear window defogger) 3-23
Defogging (Outside mirror defogger) 3-25
Differential gear oil (Front — AT vehicles) (Maintenance) 10-27
Differential gear oil (Rear — AWD vehicles) (Maintenance) 10-28
Dome lighit (Interior light) 6-11
Door locks 1-4
Child safety locks 1-8
Locking and unlocking from the inside 1-6
Locking and unlocking from the outside 1-4

Downloaded from www.Manualslib.com manuals search engine

Power door locking switches 1-7
Door open warning lights 1-9, 3-12
Drive belts (Maintenance) 10-23
Driving dranken vii
Driving in foreign countries 7-10
Driving in winter season 7-39
Driving off road 7-36
Driving tips for AWD vehicles 7-35
Driving when tired or sleepy viii
Driving with pet ix

E

Emission test (State emission testing) 7-6
Engine compartment 10-5
Engine coolant (Maintenance) 10-14
Engine exhaust gas (Carbon monoxide) 7-7
Engine hood 1-35
Engine malfunction indicator lamp (CHECK ENGINE Warning lighit) 3-9
Engine oil (Maintenance) 10-9
Engine overheating 8-2
Engine, transmission, and differential gear oil leaks (Maintenance) 10-8
Exhaust gas (Engine exhaust gas) 7-7
Exterior care 9-2
Washing 9-2
Waxing and polishing 9-3

F

Flat tires 8-6
Changing a flat tire 8-6
Temporary spare tire (if equipped) 8-11
Tire changing tools 8-13
Fog light (Bulb replacement) 10-55, 10-56
Fog light switch 3-17
Four wheel drive vehicles (Driving tips for AWD vehicles) 7-35
Front differential gear oil (Automatic transmission) (Maintenance) .. 10-27

Downloaded from www.Manualslib.com manuals search engine

Front seats 2-2
Fore and aft adjustment 2-5
Head restraint adjustment 2-6
Lumbar support 2-7
Height adjustment (if equipped) 2-5
Reclining the seatback 2-5
Seat heater 2-7
Front wheel drive warning light 3-12
Fuel economy hints 7-9
Fuel filler door and cap 1-33
Fuel filler cap 1-34
Fuel filler door release 1-33
Refueling 1-35
Fuel gauge 3-6
Fuel requirements 7-4
Fuel octane rating 7-4
Unleaded gasoline 7-4
Gasoline for California-certified LEV and TELV 7-4
Gasoline for cleaner air 7-4
Fuel tank capacity (specifications) 11-4
Fluid (Automatic transmission fluid) 10-25
Fluid (Brake fluid) 10-32
Fluid (Clutch fluid) 10-34
Fluid (Power steering fluid) 10-30
Fuses (Replacing a fuse) 10-49
Fuses and circuits 11-6

G

Gauges 3-5
Fuel gauge 3-6
Odometer 3-5
Speedometer 3-5
Tachometer (if equipped) 3-5
Temperature gauge 3-6
Trip meter 3-5
Gasoline (Fuel requirement) 7-4

Downloaded from www.Manualslib.com manuals search engine

Gas tank capacity (specifications) 11-4
Glove compartment 6-4
Glove box (Glove compartment) 6-4
GVWR and GAWR (Gross vehicle weight rating and
Gross axle weight rating) 7-46

H

Hazard warning flasher 3-13, 8-2
Heater (Heating and airconditioning) 4-3, 4-14
Heater(Seat heater) 2-7
Heater(Mirror heater=Outside mirror defogger) 3-25
Heater (for right hand drive vehicles only) 4-14
Heating and air conditioning 4-3
Air conditioner button (if equipped) 4-5
Air flow control buttons 4-3
Air inlet selection button 4-4
Fan speed control dial 4-4
Temperature control lever 4-4
HEATER OPERATION 4-6
Bi. level heating 4-9
Defrosting or defogging the windshield 4-6
Heating and defrosting 4-7
Heating 4-8
To shut off the outside air 4-10
Ventilation 4-9
AIR CONDITIONER OPERATION 4-10
Cooling or dehumidifying 4-10
Defrosting or defogging 4-11
OPERATING TIPS FOR HEATING AND AIR CONDITIONING 4-23
Heating and air conditioning (for right hand drive vehicles only) 4-14
Air conditioner button 4-15
Air flow control buttons 4-14
Air inlet selection button 4-15
Fan speed control dial 4-14
Temperature control lever 4-14
HEATER OPERATION 4-16

Downloaded from www.Manualslib.com manuals search engine

Bi. level heating 4-19
Defrosting or defogging the windshield 4-16
Heating and defrosting 4-17
Heating 4-18
To shut off the outside air 4-20
Ventilation 4-20
AIR CONDITIONER OPERATION 4-21
Cooling or dehumidifying 4-21
Defrosting or defogging 4-21
OPERATING TIPS FOR HEATING AND AIR CONDITIONING 4-23
Head light (Lighting switch) 3-13
Head light (Bulb replacement) 10-55
Head restraint 2-6
High beam indicator 3-12
High mount stop light (Bulb replacement) 10-62
Hill holder (for manual transmission — if equipped) 7-26
Hill holder (Manual transmission — if equipped) (Maintenance) 10-42
Hood (Engine hood) 1-35
Horn 3-24

I

Ignition switch 7-10
ACC 7-12
Key interlock release (AT vehicles only) 7-13
Key reminder chime 7-13
LOCK 7-11
ON 7-12
START 7-12
Illumination brightness control 3-16
I/M test (Inspection Maintenance test) (State emission testing) 7-6
Interior (cleaning the interior) 9-5
Installation of accessories 5-46, 10-53
Instrument panel overview 3-2
Interior light 6-11
Interior light (Bulb replacement) 10-61

Downloaded from www.Manualslib.com manuals search engine

J

Jack and jack hundle 8-13
Jump starting 8-3

K

Key interlock 7-13
Keyless entry system 1-10
Key reminder chime 7-13
Keys 1-3
Key number 1-3
Master, submaster and valet key 1-3

L

Leather seat (cleaning) 9-6
License plate (installation — Rear) 10-64
License plate light (Bulb replacement) 10-60
Light (interior light) 6-11
Light control 3-13
Fog light switch 3-17
Illumination brightness control 3-16
Light switch 3-13
Parking light switch 3-16
Lock (Door Lock) 1-4
Lock (Child safety locks) 1-8
Lock (Power door locking switches) 1-7
Low fuel warning light 3-12
Luggage area light (Wagon only) 6-13
Luggage area light (Bulb replacement) 10-61
Luggage cover (Wagon — if equipped) 6-14
Luggage floor strage tray 6-16
Loading your vehicle 7-44
Vehicle capacity weighit 7-45
GVWR and GAWR 7-46
Lumbar support 2-7

Downloaded from www.Manualslib.com manuals search engine

M

Main fuse and fusible link 10-52
Maintenance precautions 10-3
Before checking or servicing in the engine compartment . 10-4
When you do the checking or servicing in the engine compartment while the engine is running 10-4
Maintenance tools 6-17
Malfunction indicator lamp (CHECK ENGINE Warning lighit) 3-9
Manual transmission 7-16
Driving tips 7-17
Maximum speeds 7-17
Shifting speed for fuel economy 7-17
Manual transmission oil (Maintenance) 10-24
Meter(combination meter) 3-4
Fuel gauge 3-6
Odometer 3-5
Speedometer 3-5
Tachometer 3-5
Temperature gauge 3-6
Tripmeter 3-5
Mirrors 3-25
Inside mirror 3-25
Outside mirrors 3-25
Remote controlled rearview mirror 3-26
Outside mirror defogger 3-27
Vanity mirror 6-2

N

New vehicle break-in driving 7-3
The first 1,000 miles (1,600 km) 7-3

O

Odometer 3-5
Oil (Engine oil) 10-9
Oil (Manual transmission oil) 10-24
Oil (Front differential oil) 10-27

Downloaded from www.Manualslib.com manuals search engine

Oil (Rear differential oil) 10-28
Oil filter (Engine oil filter) 10-10
Oil pressure warning light 3-8
Overheat (Engine overheating) 8-2

P

Parking brake 7-29
Parking brake stroke (Maintenance) 10-45
Parking your vehicle 7-29
    Parking brake 7-29
    Parking tips 7-30
Parking light switch 3-16
Parking light (Bulb replacement) 10-58
Periodic inspections 7-10
Pets and driving ix
Power door locking switches (if equipped) 1-7
Power socket (Accessory power sokcet) 6-9
Power steering 7-23
Power steering fluid (Maintenance) 10-30
Power windows (for right hand drive vehicle only) 1-27
    Power windows switch cluster (driver's side) 1-27
    Passenger's switches 1-29
Power windows (if equipped) 1-24
    Power windows switch cluster (driver's side) 1-24
    Passenger's switches 1-26
Preparing to drive 7-9

R

Radio 5-4
    Antenna 5-4
    FM reception 5-5
Radio operation 5-5, 5-10, 5-18, 5-27
Rear combination light (Bulb replacement) 10-59
Rear differential gear oil (AWD vehicles) (Maintenance) 10-28
Rear gate (Wagon) 1-32
Rear seats 2-9

Downloaded from www.Manualslib.com manuals search engine

Fold down rear seat — Sedan 2-10
Fold down rear seat — Wagon 2-11
Rear view mirror 3-25
Rear window defogger switch 3-23
Rear window wiper and washer switch 3-21
Remote control mirror switch 3-26
Replacement of brake pad and lining 10-43
Brake pad 10-43
Parking brake lining 10-43
Replacement of windshield wiper blades 10-38
Replacing bulbs 10-54
Fog light (GT) 10-56
Fog light (OUTBACK and SUS) 10-55
Front turn signal, parking light and front side marker light 10-58
Headlight 10-55
High mount stop light 10-62
Interior light, spot light, luggage compartment and step light 10-61
License plate light 10-60
Rear combination lights 10-59
Trunk light 10-62
Reporting safety defects 12-4
Roof rail and crossbar/Roof rack 1-44
Roof rack 1-44
Rotation (Tire) 10-45

S

Seat (Front seat) 2-2
Seat (Rear seat) 2-9
Seat belt safety tips 2-23
Children 2-23
Expectant mothers 2-24
Infant or small children 2-23
Maintenance 2-24
Seat fablic (Cleaning the interior) 9-5
Seat heater 2-7

Downloaded from www.Manualslib.com manuals search engine

Seatback (Reclining the seatback) 2-5
Seat belts — 2-point type (lap only belts) 2-20
Fastening the seat belt 2-21
Unfastening the belt 2-22
Seat belts — 3-point type (combination lap/shoulder belts) 2-15
Seat belt warning light and chime 2-17
ELR (Emergency Locking Retractor) function 2-17
ALR (Automatic Locking Retractor) function 2-17
Adjusting the shoulder belt anchor height 2-19
Fastening the seat belt 2-18
Unfastening the belt 2-19
Seat belt warning light and chime 2-17, 3-7
Security system (option) 1-17
Selector lever (automatic transmission) 7-19
Shift lever (manual transmission) 7-16
Shift lock (release) 7-21
Side marker light (Bulb replacement) 10-58
Snow tires (winter driving) 7-43
Spark plugs (Maintenance) 10-22
Specifications 11-2
Capacities 11-4
Dimensions 11-2
Electrical system 11-3
Engine 11-3
Tires 11-4
Wheel alignment 11-5
Speedometer 3-5
Spotlight (if equipped) 6-12
Spotlight (Bulb replacement) 10-61
SRS AIRBAG 2-31
Precautions against vehicle modification 2-41
SRS AIRBAG system operation 2-35
System monitors 2-39
System servicing 2-40
Vehicle with driver's and front passenger's SRS AIRBAGs and lap/shoulder restraints 2-31

Downloaded from www.Manualslib.com manuals search engine

SRS AIRBAG warning light 3-7
Starting the engine 7-13
Automatic transmission vehicles 7-14
During cold weather below –4°F (–20°C) 7-15
Flooded engine 7-15
Manual transmission vehicles 7-14
Spare tire 8-11
Steering 7-23
Power steering 7-23
Tilt steering wheel 7-23
Step light (Bulb replacement) 10-61
Stop light (Bulb replacement) 10-59
Stopping the engine 7-16
Storage compartment 6-3
Center console 6-4
Grove compartment 6-4
Sunglasses strage compartment 6-5
Storage tray (if equipped) 6-16
Sun visors 6-2
Vanity mirror (if equipped) 6-2, 6-3
Sunroof (if equipped) 1-37
Tilting/Sliding sunroof 1-37
Tandem sunroofs 1-40

T

Tachometor 3-5
Temperature gauge 3-6
Tips for using the brakes 7-31
ABS (Anti-Lock Brake System) (if equipped) 7-33
Brake system 7-32
Braking tips 7-31
Disc brake pad wear warning indicators 7-32
Tilt steering wheel 7-23
Tire (Uniformity tire quality grading standards) 12-2
Tire (Snow tires =winter driving) 7-43
Tire chains (Winter driving) 7-43

Downloaded from www.Manualslib.com manuals search engine

Tire rotation (Tire and wheels) 10-45
Tires and wheels 10-45
Inspection and rotation 10-45
Wheel covers 10-47
Tire size (specifications) 11-4
Tool (Maintenance tools) 6-17
Tool (Tire changing tools) 8-13
Top strap anchor (Child restraint system) 2-29
Towing 8-15
Towing eyelet 8-18
Towing with all wheels on the ground 8-16
Towing with the front wheels raised off the ground 8-15
Transporting your vehicle using a flat-bed truck 8-15
Trailer towing (for all vehicles except OUTBACK and SUS) 7-47
Maximum load limits 7-48
Side mirrors 7-49
Tire 7-50
Trailer hitches 7-49
Trailer lights 7-50
Trailer towing tips 7-51
Warranties and maintenance 7-47
Trailer towing (for OUTBACK and SUS) 7-52
Connecting a trailer 7-58
Maximum load limits 7-53
Trailer hitches 7-57
Trailer towing tips 7-60
Warranties and maintenance 7-53
Trip meter 3-5
Trunk lid (Sedan) 1-30
To open and close the trunk lid from outside 1-30
To open the trunk lid from inside 1-30
Trunk light (Bulb replacement) 10-62
Turn signal indicator lights 3-12
Turn signal lever 3-15
Turn signal light (Bulb replacement — Front) 10-58
Turn signal light (Bulb replacement — Rear) 10-59

Downloaded from www.Manualslib.com manuals search engine

V

Vanity mirror 6-2
Vehicle identification 11-11
Ventilation 4-9
Ventilation (for right hand drive vehicles only) 4-20
Ventilator 4-2
Ventilator (for right hand drive vehicles only) 4-13
Vehicle capacity weight 7-45

U

Uniform tire quality grading standards 12-2
- Treadwear 12-2
- Traction A, B, C 12-2
- Temperature A, B, C 12-3

W

Warning and indicator lights 3-7
- ABS warning light (for vehicles with ABS) 3-10
- AT OIL TEMPerature warning light (for AWD AT vehicles) 3-11
- Brake fluid level warning light 3-8
- CHECK ENGINE warning light/Malfunction indicator lamp 3-9
- Checking bulbs 3-7
- Door open warning lights 3-12
- Front-wheel drive warning light (for AT vehicles) 3-12
- High beam indicator 3-12
- Low fuel warning light 3-12
- Oil pressure warning light 3-8
- Seat belt warning light and chime 3-7
- SRS AIRBAG warning light (if equipped) 3-7

Washing (Exterior care) 9-2
Waxing (Exterior care) 9-3
Wheel covers 10-47
Windows 1-23
- Power windows 1-24, 1-27

Windshield washer fluid 10-37

Downloaded from www.Manualslib.com manuals search engine

Windshield wiper and washer switch 3-19
Winter driving 7-39
Corrosion protection 7-44
Driving on snowy and icy roads 7-41
Operation during cold weather 7-39
Rocking the vehicle 7-44
Snow tires 7-43
Tire chains 7-43
Wiper controls 3-17
Rear window wiper and washer switch
(Wagon — if equipped) 3-21
Windshield wipers and washer switch 3-19
Wiper deicer 3-22
Windshield wiper blades (Replacement) 10-38

Downloaded from www.Manualslib.com manuals search engine

Doors and locks

Keys **1-3**
- Master, submaster and valet key 1-3
- Key number 1-3

Door locks **1-4**
- Locking and unlocking from the outside 1-4
- Locking and unlocking from the inside 1-6
- Power door locking switches (if equipped) 1-7
- Child safety locks 1-8

Door open warning lights **1-9**

Keyless entry system (if equipped) **1-10**
- Locking the doors 1-11
- Unlocking the doors 1-11
- Illuminated entry 1-11
- Sounding a panic alarm 1-12
- Selecting audible signal operation 1-12
- Replacing the battery 1-12
- Replacing lost transmitters 1-13

Security system (if equipped) **1-17**
- System operation 1-17
- Arming the system 1-18
- Disarming the system 1-19
- Sounding a panic alarm 1-20
- Valet mode 1-20
- Passive arming 1-21
- Tripped sensor identification 1-23

Windows **1-23**

Power windows (if equipped) **1-24**
- Power window switch cluster (driver's side) 1-24
- Passenger's switches 1-26

Power windows (Right hand drive vehicles only) **1-27**
- Power window switch cluster (driver's side) 1-27
- Passenger's switches 1-29

Trunk lid (Sedan) **1-30**
- To open and close the trunk lid from outside 1-30
- To open the trunk lid from inside 1-30

Rear gate (Wagon) **1-32**
- To open and close the rear gate 1-32

Fuel filler door and cap **1-33**
- Fuel filler door release 1-33
- Fuel filler cap 1-34

Downloaded from www.Manualslib.com manuals search engine

Refueling *1-35*
Engine hood *1-35*
Sunroof (Tilting/sliding sunroof – if equipped) *1-37*
Operation *1-37*
Manual operation *1-38*
Sunroof (Tandem sunroofs – if equipped) *1-40*
Operation *1-40*
Manual operation *1-42*
Roof rail and crossbar/Roof rack (if equipped) *1-44*
When luggage is put on the slats *1-45*
Installing carrying attachment on the crossbars *1-45*
Removal and installation of the crossbars (OUTBACK and OUTBACK Ltd.) *1-45*

Downloaded from www.Manualslib.com manuals search engine

Keys

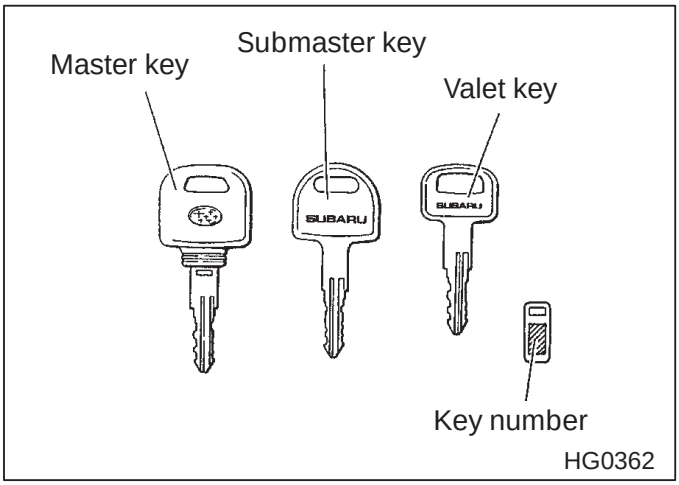

■ Master, submaster and valet key

Three types of keys are provided for your vehicle.
Master key, submaster key and valet key.

The master key and submaster key fit all locks on your vehicle.

- Ignition switch
- Doors
- Trunk or Rear gate
- Glove compartment

The valet key fits only the ignition switch and door locks. You can keep the trunk and glove compartment locked when you leave your vehicle and valet key at a parking facility.

■ Key number

The key number is stamped on the metal plate attached to the key set. Write down the key number and keep it in another safe place, not in the vehicle. This number is needed to make a replacement key if you lose your key or lock it inside the vehicle.

Downloaded from www.Manualslib.com manuals search engine

Door locks

■ Locking and unlocking from the outside

▼ For vehicles with power door locking switches

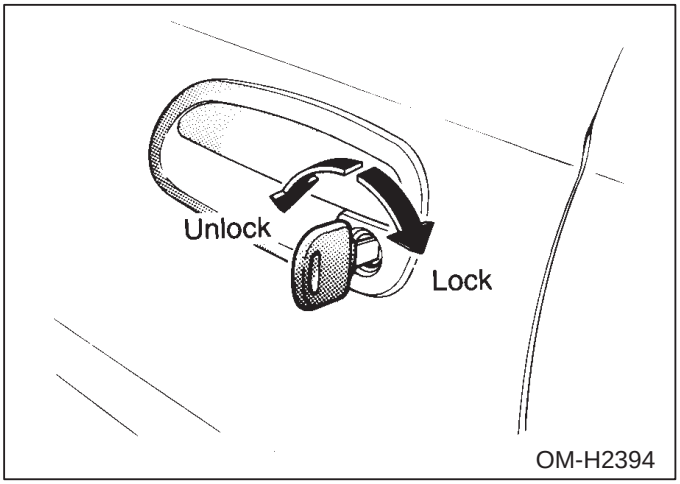

To lock the door from the outside with the key, turn the key toward the rear. To unlock the door, turn the key toward the front.

Lift the outside door handle to open an unlocked door.

Locking without the key

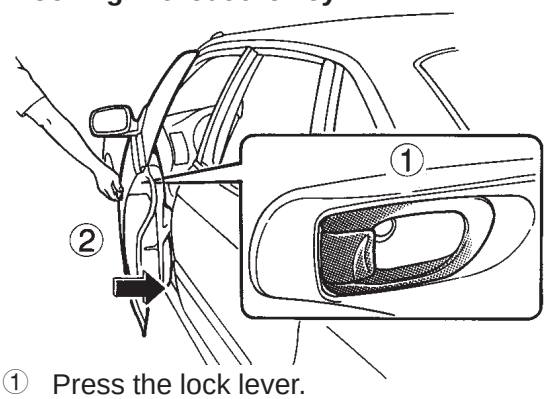

① Press the lock lever.
② Close the door

OM-H2109

Locking without the key

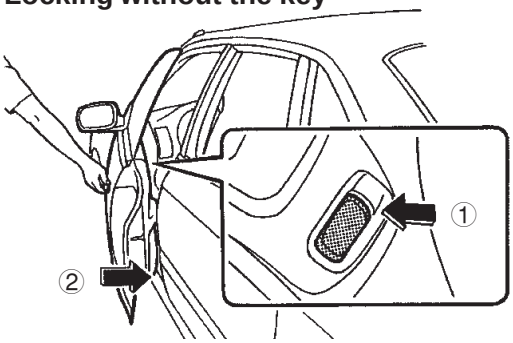

① Press the upper part of the power door locking switch.
② Close the door

HB0228

To lock the door from the outside without the key, press the end of the lock lever down on the door and then close the door.

To lock the door from the outside using the power door locking switch, press the upper part of the switch (“LOCK” side) and then close the door. In this case, all closed doors and the rear gate (for wagon) are

Downloaded from www.Manualslib.com manuals search engine

locked at the same time.
Always make sure that all doors and the rear gate are locked before leaving your vehicle.

NOTE
Make sure that you do not leave the key inside the vehicle before locking the doors from the outside without the key.

▼ For vehicles without power door locking switches

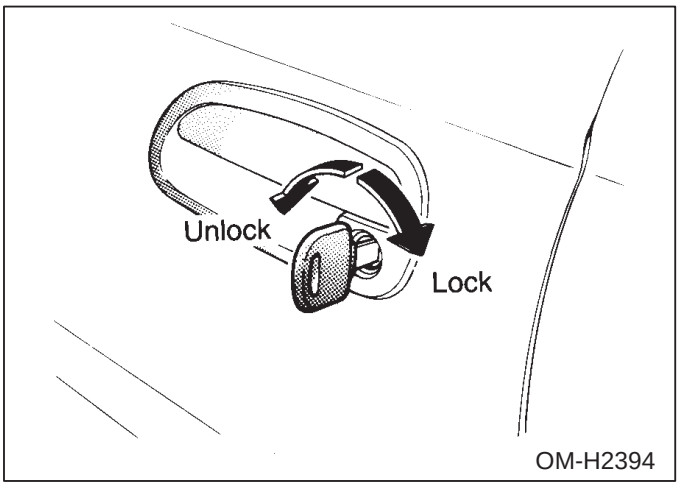

To lock the door from the outside with the key, turn the key toward the rear. To unlock the door, turn the key toward the front.

Lift the outside door handle to open an unlocked door.

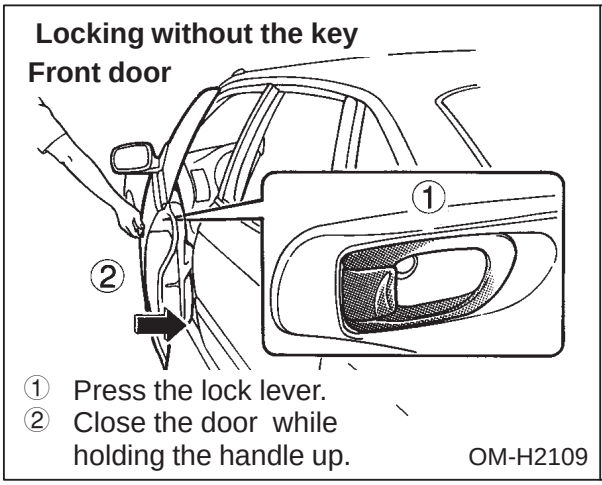

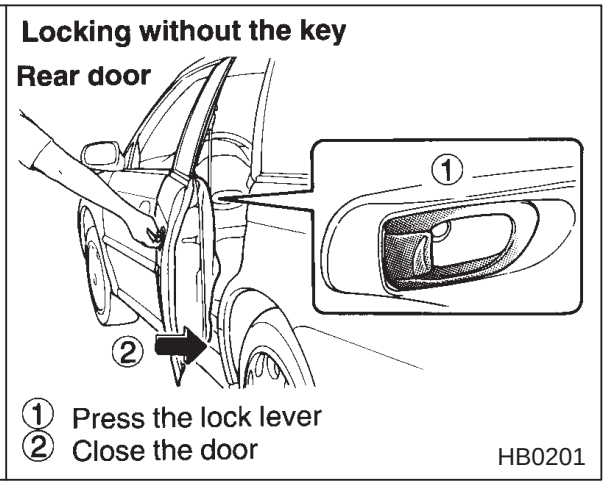

To lock the **front door** from the outside without the key, press the end of the lock lever down on the door and hold the outside door handle

– CONTINUED –

Downloaded from www.Manualslib.com manuals search engine

up while closing the door.

To lock the **rear door** from the outside without the key, press the end of the lock lever down on the door and then close the door.
Always make sure that all doors and the rear gate are locked before leaving your vehicle.

NOTE
Make sure that you do not leave the key inside the vehicle before locking the doors from the outside without the key.

■ Locking and unlocking from the inside

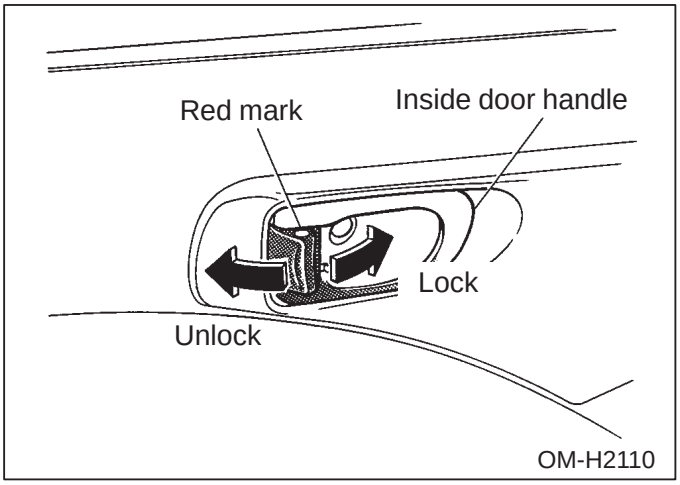

To lock the door from the inside, press the end of the lock lever down. To unlock the door from the inside, pull the front end of the lock lever.

The red mark on the lock lever appears when the door is unlocked.

Pull the inside door handle to open an unlocked door.
Always make sure that all doors and the rear gate are locked before starting to drive.

Downloaded from www.Manualslib.com manuals search engine

■ Power door locking switches (if equipped)

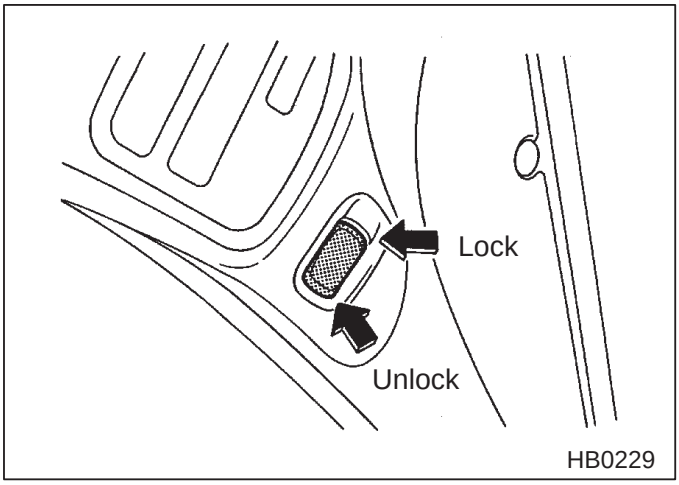

All doors and the rear gate (for wagon) can be locked and unlocked by the power door locking switches at the driver's side and the front passenger's side doors.

To lock the doors, press the upper part of the switches.
To unlock the doors, press the lower part of the switches.

When you close the doors after you set the door locks, the doors remain locked.

NOTE
Make sure that you do not leave the key inside the vehicle before locking the doors from the outside using power door locking switches.

– CONTINUED –

Downloaded from www.Manualslib.com manuals search engine

■ Child safety locks

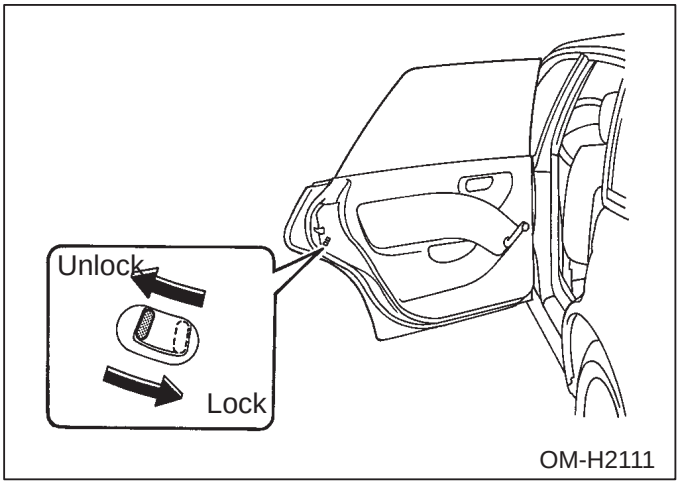

⚠ WARNING

Always use the child safety lock whenever a child rides in the rear seat. Serious injury could result if a child accidentally opened the door and fell out.

Each rear door has a child safety lock that prevents the doors from being opened even if the inside door handle is pulled.

When the child safety lock lever is in the lock position, the door cannot be opened from inside regardless of the position of the inner door handle lock lever. The door can only be opened from the outside.

Downloaded from www.Manualslib.com manuals search engine

Door open warning lights

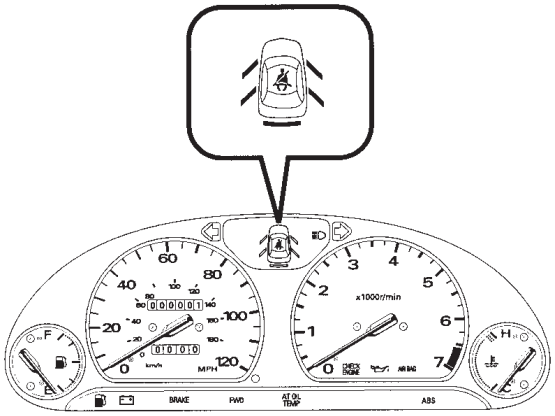

HB0230

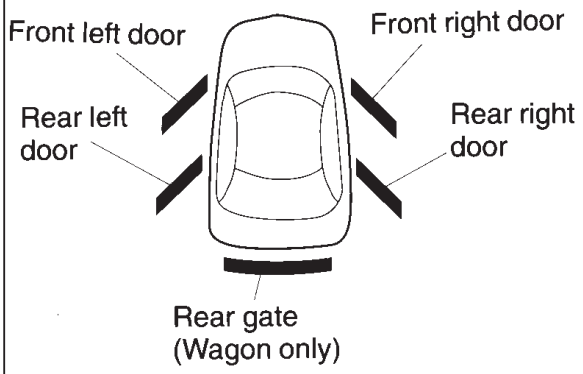

HB0010

Your vehicle is equipped with door open warning lights. When a door is not fully closed, a light comes on indicating specifically which door it is. When all doors are properly closed, all of the door open warning lights go out. Always make sure these lights are out before starting to drive.

Downloaded from www.Manualslib.com manuals search engine

Keyless entry system (if equipped)

⚠ CAUTION

- **Do not expose the transmitter to severe shocks, such as those experienced as a result of dropping or throwing.**
- **Do not take the transmitter apart except when replacing the battery.**
- **Do not get the transmitter wet. If it gets wet, wipe it dry with a cloth immediately.**

This device complies with Part 15 of the FCC Rules and with RSS-210 of Industry Canada. Operation is subject to the following two conditions: (1) This device may not cause harmful interference, and (2) this device must accept any interference received, including interference that may cause undesired operation.
Changes or modifications not expressly approved by the party responsible for compliance could void the user's authority to operate the equipment.

Two transmitters are provided for your vehicle.

The keyless entry system has following functions.

- Locking and unlocking the doors (and rear gate on the wagon) without a key
- Sounding a panic alarm
- Arming and disarming the security system (if your vehicle is equipped with an optional security system). See the next section "Security system (if equipped)" for detailed information.

The operable distance of the keyless entry system is approximately 30 feet (10 meters) however will vary depending on environmental conditions. Range may be reduced near sources of RF interference such as power plants and radio/television broadcasting towers.

The keyless entry system does not operate when the key is inserted in

Downloaded from www.Manualslib.com manuals search engine

the ignition switch.

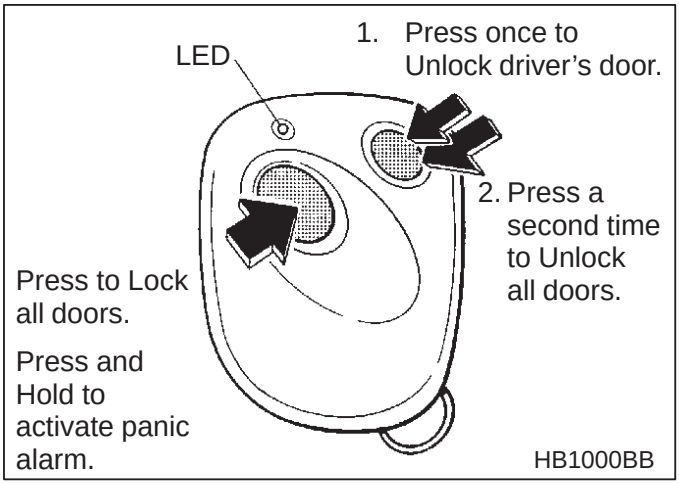

■ Locking the doors

Briefly press the "LOCK/ARM" button (for less than two seconds) to lock all doors (and rear gate on the wagon). The horn will sound one time.
If any of the doors (or the rear gate) is not fully closed, the horn will sound three times to alert you that the doors (or the rear gate) are not properly closed. When you close the door, it will automatically lock.

■ Unlocking the doors

Briefly press the "UNLOCK/DISARM" button (for less than two seconds) to unlock the driver's door. The horn will sound two times. To unlock all doors (and rear gate on the wagon), briefly press the "UNLOCK/DISARM" button a second time.

■ Illuminated entry

The interior (dome) light will illuminate when the "UNLOCK/DISARM" button is pressed. The light will illuminate for approximately 30 seconds or until the key is inserted in the ignition switch or until the "LOCK/ARM" button is pressed. Once any of the doors (or the rear gate on the wagon) is opened, this function will be canceled. The interior light must be set to **the middle position** in order for this function to operate.

– CONTINUED –

Downloaded from www.Manualslib.com manuals search engine

■ Sounding a panic alarm

To activate the alarm, keep the “LOCK/ARM” button pressed **for more than two seconds**.

To deactivate it, press the “LOCK/ARM” button or “UNLOCK/DISARM” button. Unless a button on the remote is pressed, the alarm will be deactivated after approximately 30 seconds.

■ Selecting audible signal operation

Using the horn, the system will give you an audible signal when the doors lock and unlock. If desired, you may turn the audible signal off.

To turn the audible signal off, simultaneously depress “LOCK/ARM” and “UNLOCK/DISARM” buttons for more than two seconds. The horn will sound two times to inform you that the audible signal has been turned off.

To turn the audible signal on, simultaneously depress “LOCK/ARM” and “UNLOCK/DISARM” buttons for more than two seconds. The horn will sound one time to inform you that the audible signal has been turned on.

■ Replacing the battery

⚠ CAUTION

Do not let dust, oil or water get on or in the transmitter when replacing battery.

When the transmitter battery begins to get weak, transmitter range will begin to decrease and the LED will not illuminate. Replace the battery as soon as possible.

Downloaded from www.Manualslib.com manuals search engine

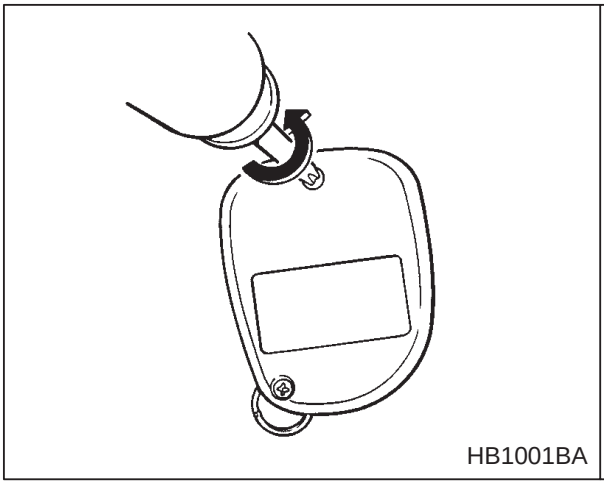

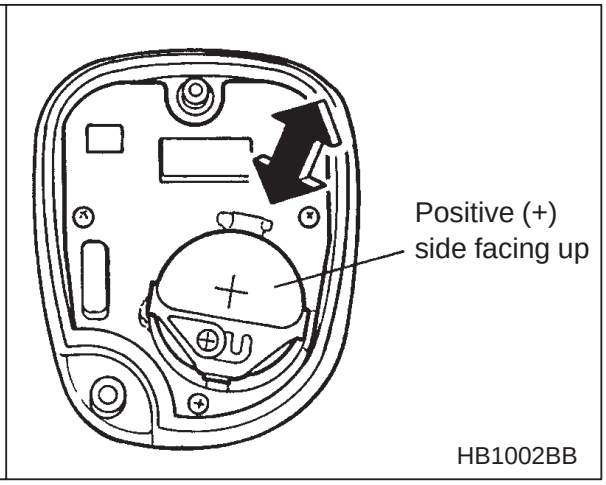

To replace the battery:

1. Remove the two screws on the back of the transmitter case by using a phillips screwdriver.
2. Separate the case.
3. Remove the old battery from the holder.
4. Replace with a new battery (Type CR2032 or equivalent) making sure to install the new battery with the positive (+) side facing up.
5. Install the back half of the transmitter case.
6. Reinstall the two screws on the back of the transmitter case.

After the battery is replaced, the transmitter must be synchronized with the keyless entry system's control unit. Press either the "LOCK/ARM" or "UNLOCK/DISARM" button *six times* to synchronize the unit.

■ Replacing lost transmitters

If you lose a transmitter or want to purchase additional transmitters (up to four can be programmed), you should re-program all of your transmitters for security reasons. It is recommended that you have your dealer program all of your transmitters into your system.

▼ Programming the transmitters

The keyless entry system is equipped with a special code learning feature that allows you to program new transmitter codes into the system or to delete old ones. The system can learn up to four unique transmitter codes. The four transmitter codes may be the same or different.

– CONTINUED –

Downloaded from www.Manualslib.com manuals search engine

To enter the programming mode:

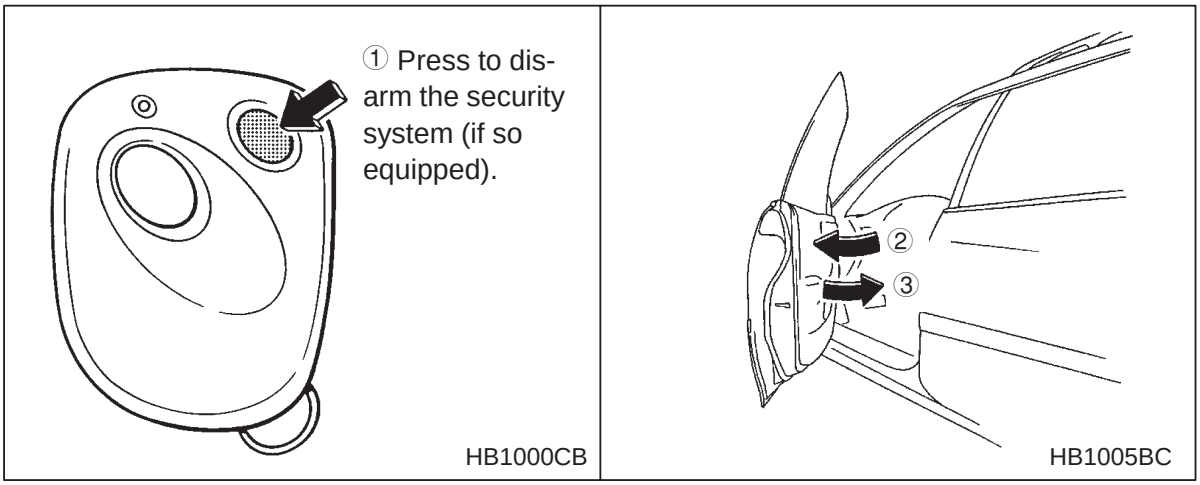

1. Disarm the security system. (if your vehicle is equipped with the optional security system.)
2. Open the driver's door and sit in the driver's seat.
3. Close the driver's door.

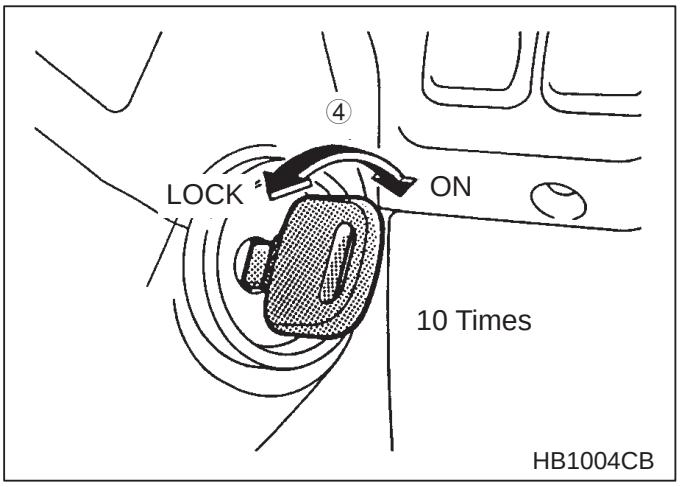

4. Place the ignition key into the ignition switch and cycle the switch from LOCK to ON ten times **within 15 seconds**. Be sure to stop at the LOCK position **and leave the key in the ignition**. The horn will sound once to indicate that you are in the transmitter programming mode.

NOTE

You must finish the next step (opening the driver's door) within 45 seconds of starting this procedures.

Downloaded from www.Manualslib.com manuals search engine

To program the transmitters:

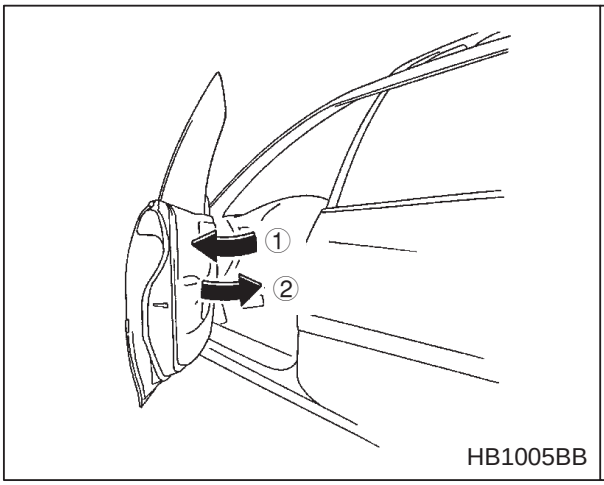

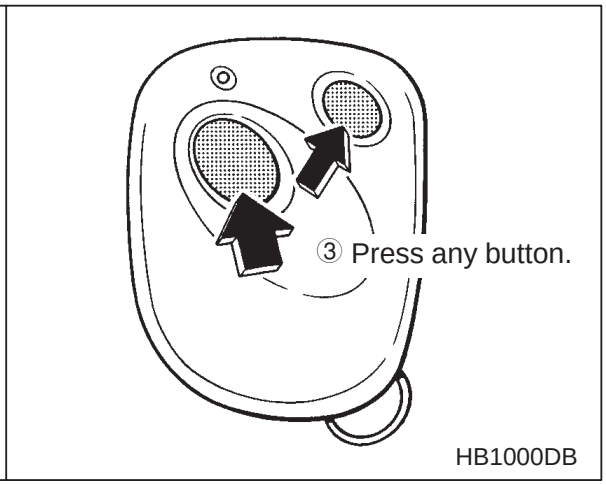

1. Open the driver's door.
2. Close the driver's door.
3. Press and release any button on the transmitter that you wish to program into the system. The horn will sound two times to indicate that the transmitter has been programmed.

Any additional transmitters can also be programmed at this time. Repeat steps 1 through 3 for an additional transmitter.

To exit the programming mode:

1. After all of your transmitters are programmed, remove the key from the ignition switch.
The horn will sound three times to indicate that the system has exited the programming mode.
2. Make sure that the keyless entry system properly operates by operating each transmitter.

▼ Deleting old transmitter codes

The control unit of the keyless entry system has four memory locations to store transmitter codes, giving it the ability to operate with up to four transmitters. When you lose a transmitter, the lost transmitter's code remains in the memory. For security reasons, lost transmitter codes should be deleted from the memory.
To delete old transmitter codes, program four transmitter codes into the system. If you have only one current transmitter, program it four

– CONTINUED –

Downloaded from www.Manualslib.com manuals search engine

times. If you have two current transmitters, program each one twice. If you have three current transmitters, program two of them once and the third one twice. This process will leave only current transmitter codes in the system's memory.

NOTE

Make sure no one else is operating their keyless entry system within range of your vehicle when programming transmitters. If someone else were to operate their remote transmitter while you are programming your transmitters, it is possible that their transmitter code will be programmed into your system, allowing them unauthorized access to your vehicle.

Downloaded from www.Manualslib.com manuals search engine

Security system (if equipped)

The security system helps to protect your vehicle and valuables from theft. The horn sounds and the parking lights flash if someone attempts to break into your vehicle. The starter motor is also interrupted to prevent starting the vehicle without a key.

The system can be armed and disarmed with the remote transmitter.
The system does not operate when the key is inserted into the ignition switch.

■ System operation

The security system will give the following alarm indications when triggered:

- The parking lights will flash and the horn will sound intermittently. In addition, the starter motor will not operate.
- The alarm automatically resets after 30 seconds; however, the alarm will reactivate if the vehicle is tampered with again. The alarm will continue for twelve times if any sensor continues to be activated.

The alarm is triggered by:

- Opening a door or the rear gate.
- Application of physical shock to the vehicle (e.g. breaking glass or forced entry). Note that there are two alarm levels for shock; warning and alarm. In warning mode, the alarm detects lower level vibrations and triggers 2 warning chirps on the horn and two flashes on the lights as a deterrent to would be vandals. In alarm mode, higher levels of shock are detected and the system will go into full alarm.
- Ignition switch being turned on while in armed state.

– CONTINUED –

Downloaded from www.Manualslib.com manuals search engine

■ Arming the system

▼ To arm the system using remote transmitter

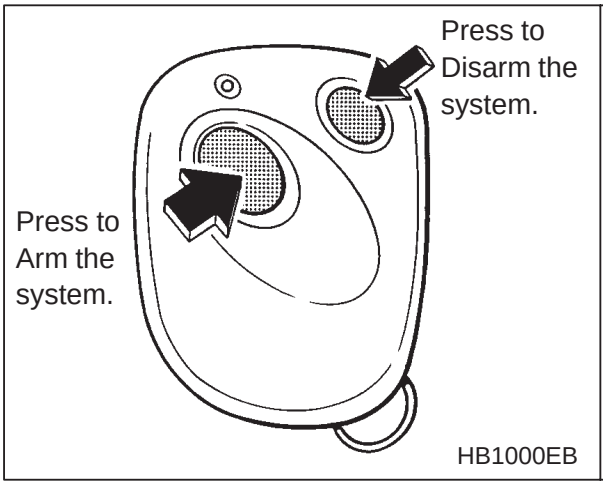

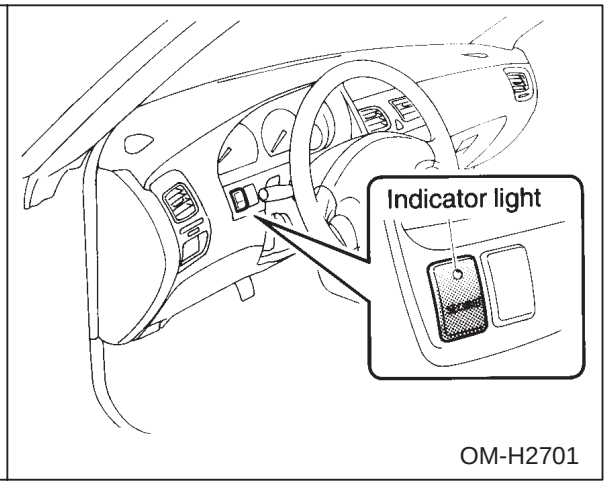

1. Close all windows and sunroofs (if so equipped).
2. Remove the key from the ignition switch.
3. Open the doors and get out of the vehicle.
4. Make sure that the engine hood and the trunk lid are locked.
5. Close all doors (and the rear gate on the wagon).
6. Briefly press the “LOCK/ARM” button (for less than two seconds). All doors (and the rear gate on the wagon) will lock, the horn will sound one time, the parking lights will flash one time and the indicator light starts flashing slowly (approximately once every two seconds).

If any of the doors (or the rear gate) is not fully closed, the horn sounds three times, the parking lights flash three times and the indicator light flashes rapidly to alert you that the doors (or the rear gate) are not properly closed. When you close the door, the system will automatically arm and doors will automatically lock.

Downloaded from www.Manualslib.com manuals search engine

▼ To arm the system using power door locking switches

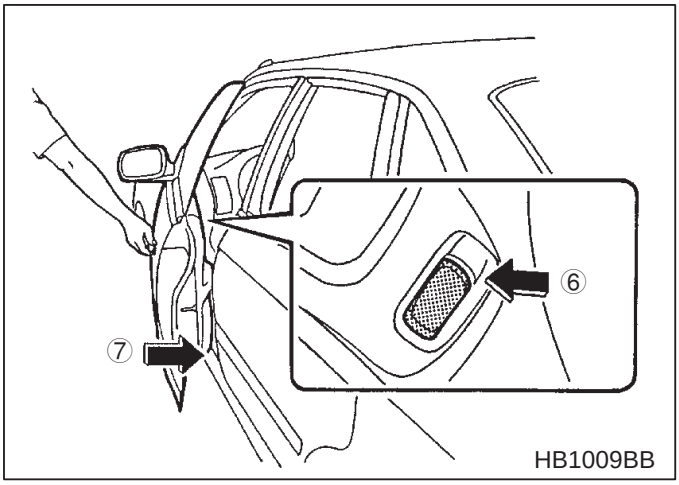

1. Close all windows and sunroofs (if so equipped).
2. Remove the key from the ignition switch.
3. Open the doors and get out of the vehicle.
4. Make sure that the engine hood and the trunk lid are locked.
5. Close the doors (and the rear gate on the wagon) but leave only the driver's door or the front passenger's door open.
6. Press the upper part of the power door locking switch ("LOCK" side) at the door to set the door locks.
7. Close the door. The horn will sound one time, the parking lights will flash one time and the indicator light on the dashboard will start flashing slowly (approximately once every two seconds) to inform you that the system has armed.

NOTE

The system can be armed even if the engine hood, the trunk lid, the windows and/or sunroofs are opened. Always make sure that they are fully closed before arming the system.

■ Disarming the system

Briefly press the "UNLOCK/DISARM" button (for less than two seconds) on the remote transmitter. The driver's door will unlock, the horn will sound two times, the parking lights will flash two times and the indicator light will go off.

– CONTINUED –

Downloaded from www.Manualslib.com manuals search engine

To unlock all doors (and the rear gate on the wagon), briefly press the "UNLOCK/DISARM" button a second time.

▼ Emergency disarming

If you cannot disarm the system using the transmitter (i.e. the transmitter is lost, broken or the transmitter battery is too weak), you can disarm the system without using the transmitter.

To disarm the system:

1. Unlock the door with the key and then open the door.
2. The alarm will sound.
3. Insert the key into the ignition switch and cycle it from the "LOCK" to the "ON" position three (3) times **within 5 seconds**.

■ Sounding a panic alarm

To activate the alarm, keep the "LOCK/ARM" button pressed **for more than two seconds**.

To deactivate it, press the "LOCK/ARM" button or "UNLOCK/DISARM" button.

The parking lights will also flash when the alarm is activated.

Unless a button on the remote is pressed, the alarm will be deactivated after approximately 30 seconds.

■ Valet mode

When you choose the valet mode, the security system does not operate. In valet mode, the remote transmitter is used only for locking and unlocking the doors (and rear gate on the wagon) and panic activation.

To enter the valet mode, open the driver's door and keep the "UNLOCK/DISARM" button depressed **for more than two seconds**. The indicator light on the instrument panel repeatedly flashes two times while the system is in valet mode.

To exit valet mode, open the driver's door and keep the "UNLOCK/DISARM" button pressed **for more than two seconds.** The indicator will stop flashing.

Downloaded from www.Manualslib.com manuals search engine

■ Passive arming

When passive arming mode has been programmed by the dealer, arming of the system is automatically accomplished without using the remote transmitter. Note that in this mode, DOORS MUST BE MANUALLY LOCKED.

▼ To enter the passive mode

⚠ WARNING

Do not disconnect or tamper with any yellow connector and/or any harness covered with yellow insulation and/or tape.
Doing so could result in accidental inflation of the SRS AIRBAG or could make the SRS AIRBAG system inoperative, which may result in serious injury.

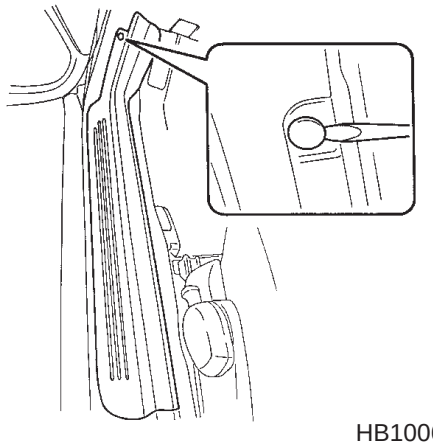
HB1006BA

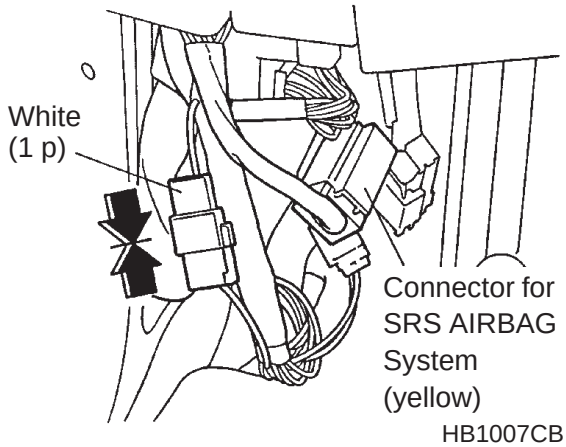

HB1007CB

1. Remove the side sill cover on the driver's side.
   1) Open the driver's door.
   2) Remove the clip by prying the edge with screwdriver.
   3) Remove the side sill cover by pulling it up.
2. Connect the white (1 pole) connector.
3. Install the side sill cover.

To place the system in active arming mode (remote required for activation), disconnect the white connector.

– CONTINUED –

Downloaded from www.Manualslib.com manuals search engine

▼ Arming the system

⚠ CAUTION

In passive mode, the system will automatically activate the alarm but WILL NOT automatically lock the doors. In order to lock the doors you must either lock them as indicated in step 4 below or with the key once they have been closed. Failure to lock the doors manually will result in a higher security risk.

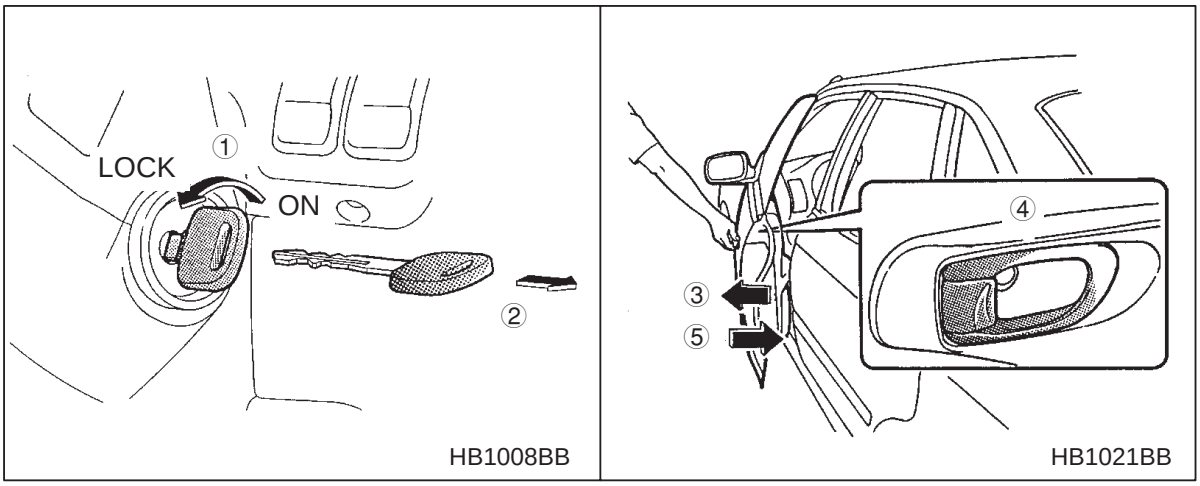

1. Turn the ignition switch from “ON” to “LOCK” position.
2. Remove the key from the ignition switch.
3. Open the doors and get out of the vehicle.
4. Before closing the doors, lock all doors with the inside door lock levers.
5. Close the doors. The system will automatically arm after one minute.

In the passive mode, the system can also be armed with the remote transmitter or with the power door locking switches.

▼ Disarming the system

To disarm the system, briefly press the “UNLOCK/DISARM” button on the transmitter.

Downloaded from www.Manualslib.com manuals search engine

■ Tripped sensor identification

If the horn sounds four times and the parking lights flash four times when you disarm the system, this indicates that the alarm was triggered. The number of times the indicator light flashes indicates what sensor caused the alarm condition.

To enter identification mode:

1. Open the driver's door and leave it open.
2. Turn the ignition switch to the "ON" position two times. ("LOCK" → "ON" → "LOCK" → "ON" → "LOCK")
3. The indicator light will start flashing.

The indicator light provides the following indications.

Flashing one time: Any door or the rear gate has been opened.

Flashing three times: The impact sensor in the system's unit has been activated. This may indicate that your vehicle has been shocked or tampered with by some outside force and/or unauthorized person.

Flashing four times: The ignition switch has been turned on.

To exit this mode, close the door and turn the ignition switch to the "ON" position.

Windows

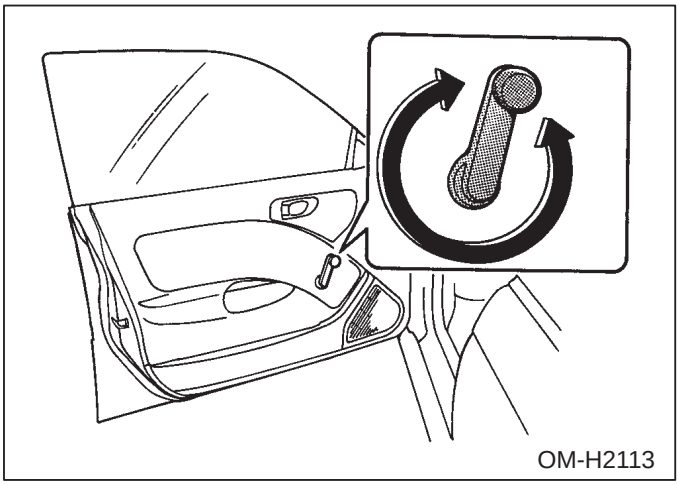

Turn the handle to open or close the window.

Downloaded from www.Manualslib.com manuals search engine

Power windows (if equipped)

⚠ WARNING

- **When operating power windows, be extremely careful to prevent anyone's fingers, arms or head from being caught in the window.**
- **Always lock the passengers' windows using the lock switch when children are riding in the vehicle.**
- **Before leaving the vehicle, always remove the key from the ignition switch for safety if a child remains in the vehicle. Failure to follow this procedure could result in injury to a child operating the power window.**

The power windows operate only when the ignition switch is in the "ON" position.

■ Power window switch cluster (driver's side)

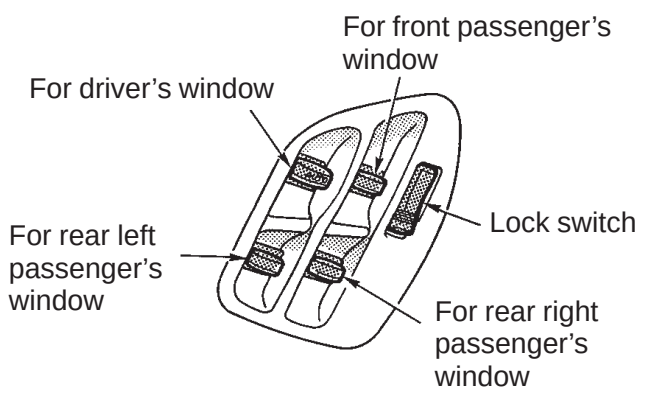

OM-H2114

Downloaded from www.Manualslib.com manuals search engine

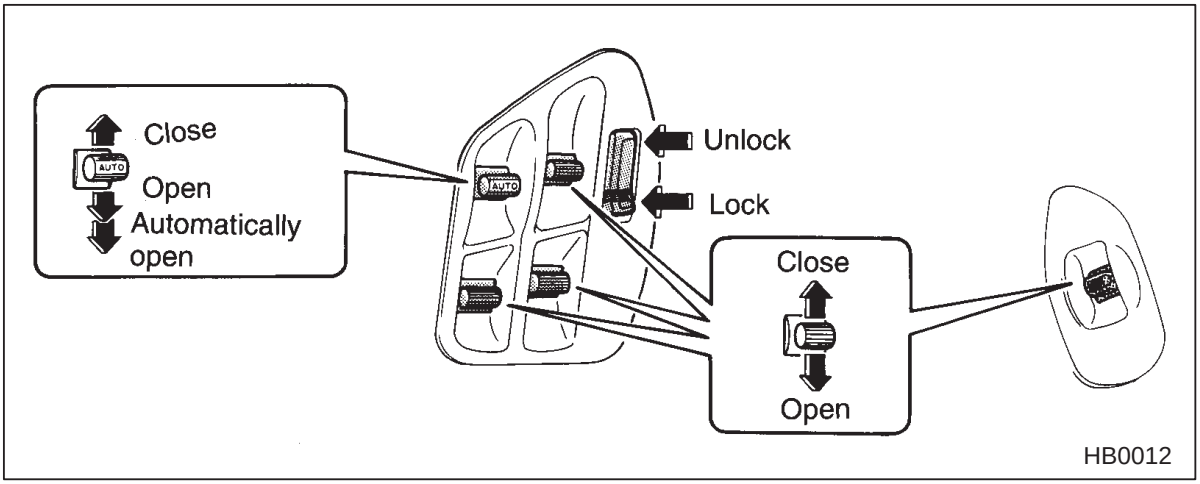

All door windows can be controlled by the power window switch cluster at the driver side door.

▼ To open or close the driver's window

AUTO switch: This switch has two functions.
Push the switch down until it clicks and release it, and the window will fully open. To stop the window halfway, push the switch up lightly.

Push the switch down or up lightly and hold it. The window will open or close as long as the switch is held.

▼ To open or close the passengers' windows

To open the passengers' windows, push the appropriate switch down and hold it until the window reaches the desired position. To close the window, push the switch up and hold it until it reaches the desired position.

▼ To lock the passengers' windows

To lock the passengers' windows, push the lower part of the lock switch. When the lock switch is in the "LOCK" position, the passengers' windows cannot be opened or closed.

– CONTINUED –

Downloaded from www.Manualslib.com manuals search engine

■ Passengers' switches

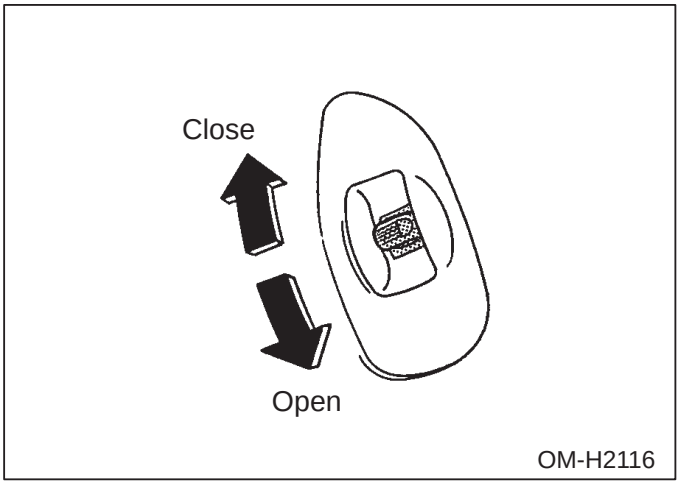

To open the window, push the switch down and hold it until the window reaches the desired position. To close the window, push the switch up and hold it until the window reaches the desired position.

When the lock switch on the power window switch cluster, located on the driver's side door, is in the "LOCK" position, the passengers' windows cannot be operated with the passengers' switches.

Downloaded from www.Manualslib.com manuals search engine

Power windows (For right hand drive vehicles only)

⚠ WARNING

- **When operating power windows, be extremely careful to prevent anyone's fingers, arms or head from being caught in the window.**
- **Always lock the passengers' windows using the lock switch when children are riding in the vehicle.**
- **Before leaving the vehicle, always remove the key from the ignition switch for safety if a child remains in the vehicle. Failure to follow this procedure could result in injury to a child operating the power window.**

The power windows operate only when the ignition switch is in the "ON" position.

■ Power window switch cluster (driver's side)

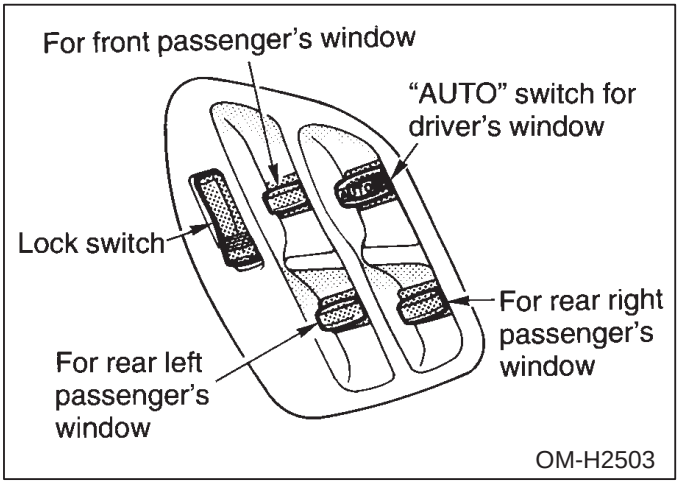

– CONTINUED –

Downloaded from www.Manualslib.com manuals search engine

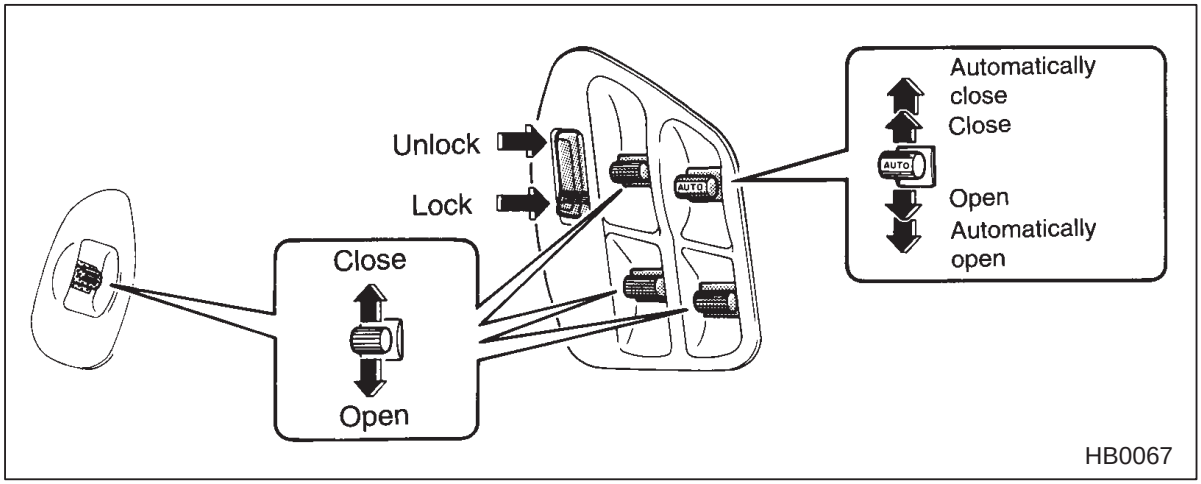

All door windows can be controlled by the power window switch cluster at the driver side door.

▼ To open or close the driver's window

AUTO switch: This switch has two functions.
Push the switch down or up until it clicks and release it, and the window will fully open or close. To stop the window halfway, push the opposite side of switch lightly.

Push the switch down or up lightly and hold it. The window will open or close as long as the switch is held.

▼ To open or close the passengers' windows

To open the passengers' windows, push the appropriate switch down and hold it until the window reaches the desired position. To close the window, push the switch up and hold it until it reaches the desired position.

▼ To lock the passengers' windows

To lock the passengers' windows, push the lower part of the lock switch. When the lock switch is in the "LOCK" position, the passengers' windows cannot be opened or closed.

Downloaded from www.Manualslib.com manuals search engine

■ Passengers' switches

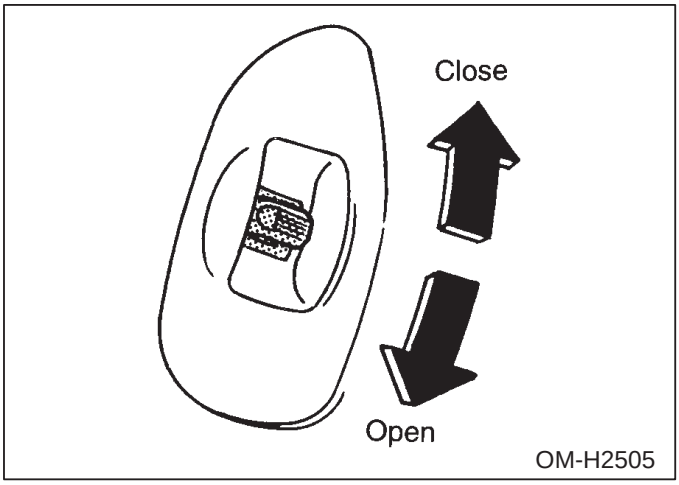

To open the window, push the switch down and hold it until the window reaches the desired position. To close the window, push the switch up and hold it until the window reaches the desired position.

When the lock switch on the power window switch cluster, located on the driver's side door, is in the "LOCK" position, the passengers' windows cannot be operated with the passengers' switches.

Downloaded from www.Manualslib.com manuals search engine

Trunk lid (Sedan)

⚠ WARNING

To prevent dangerous exhaust gas from entering the vehicle, always keep the trunk lid closed while driving.

■ To open and close the trunk lid from outside

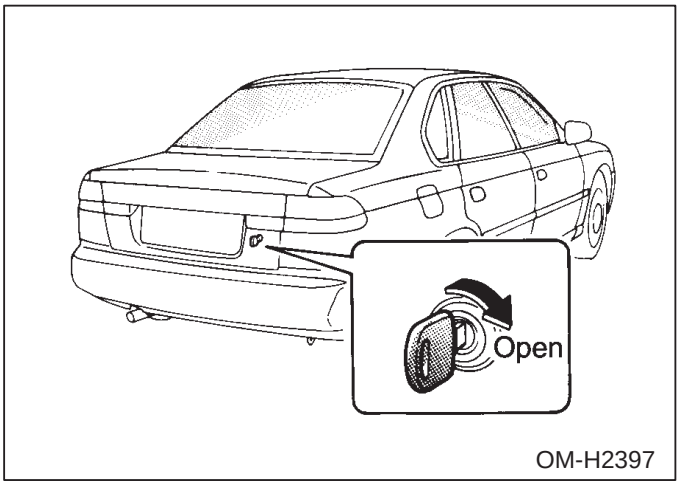

To open the trunk lid from outside, insert the key and turn it clockwise. To close the trunk lid, lightly press the trunk lid down until the latch engages.

■ To open the trunk lid from inside (if your vehicle is equipped with inside trunk lid release)

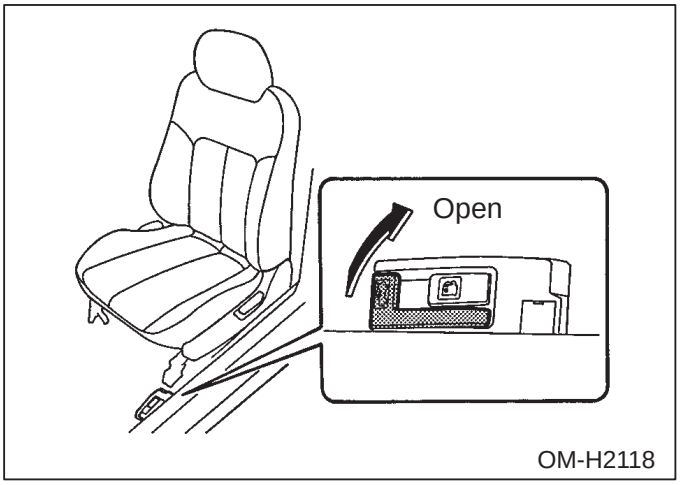

Downloaded from www.Manualslib.com manuals search engine

Pull the trunk lid release lever upward.

▼ To cancel the trunk lid release

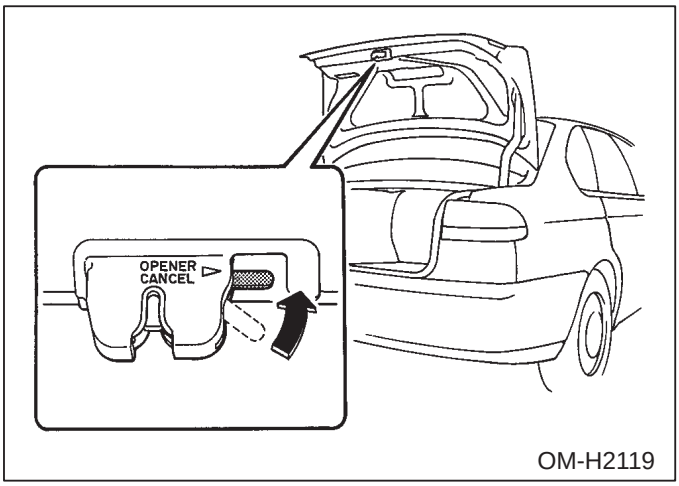

The inside trunk lid release can be cancelled to help prevent unauthorized entry into the trunk. To cancel the trunk lid release, set the lid release cancel lever (located on the inside of the trunk lid, mounted to the trunk lid latch) to the “CANCEL” position. When this lock is in the “CANCEL” position, the trunk can be opened only by the master key.

Downloaded from www.Manualslib.com manuals search engine

Rear gate (Wagon)

⚠ WARNING

To prevent dangerous exhaust gas from entering the vehicle, always keep the rear gate closed while driving.

■ To open and close the rear gate

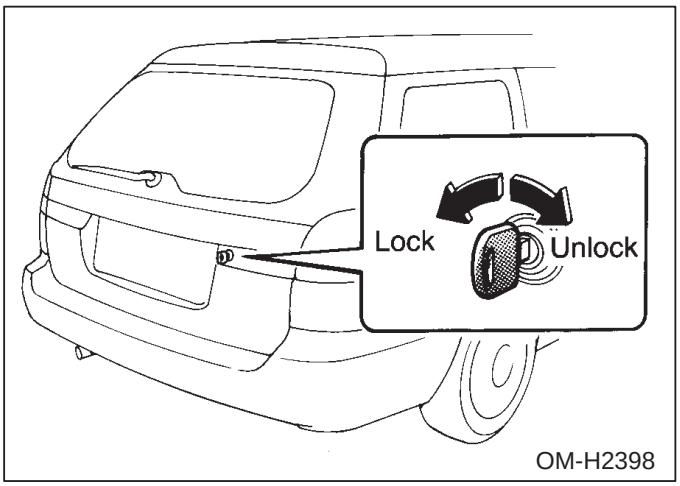

To unlock the rear gate, insert the key in the keyhole and turn it clockwise. To lock the rear gate, insert the key in the keyhole and turn it counterclockwise. If your vehicle is equipped with power door locking switches, the rear gate can also be locked and unlocked through use of the power door locking switches. Refer to Power Door Locking Switches section in this chapter.

To open the rear gate, first unlock the rear gate lock then pull the outside handle up. To close the rear gate, lower it slowly and push down firmly until the latch engages.

Downloaded from www.Manualslib.com manuals search engine

Fuel filler door and cap

⚠ WARNING

- **Gasoline vapor is highly flammable. Before refueling, always first stop the engine and make sure that there are no lighted cigarettes, open flames or electrical sparks in the adjacent area.**
- **When opening the cap, do not remove the cap quickly. Fuel may be under pressure and spray out of the fuel filler neck especially in hot weather, which may cause injury.**

⚠ CAUTION

Never add any cleaning agents to the fuel tank. The addition of a cleaning agent may cause damage to the fuel system.

For choosing the right fuel for your SUBARU, refer to the “Fuel Requirements” section located in chapter 7.

■ Fuel filler door release

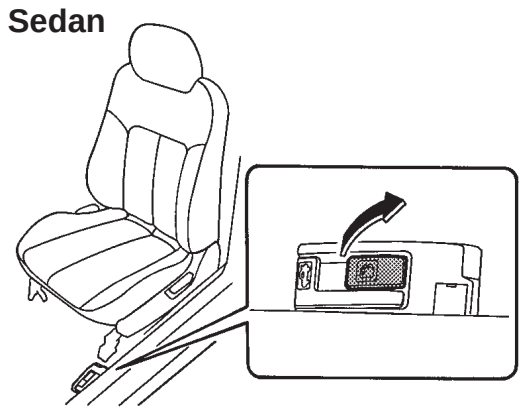

OM-H2121

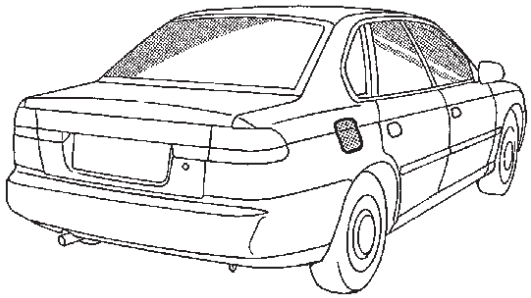

OM-H2122

– CONTINUED –

Downloaded from www.Manualslib.com manuals search engine

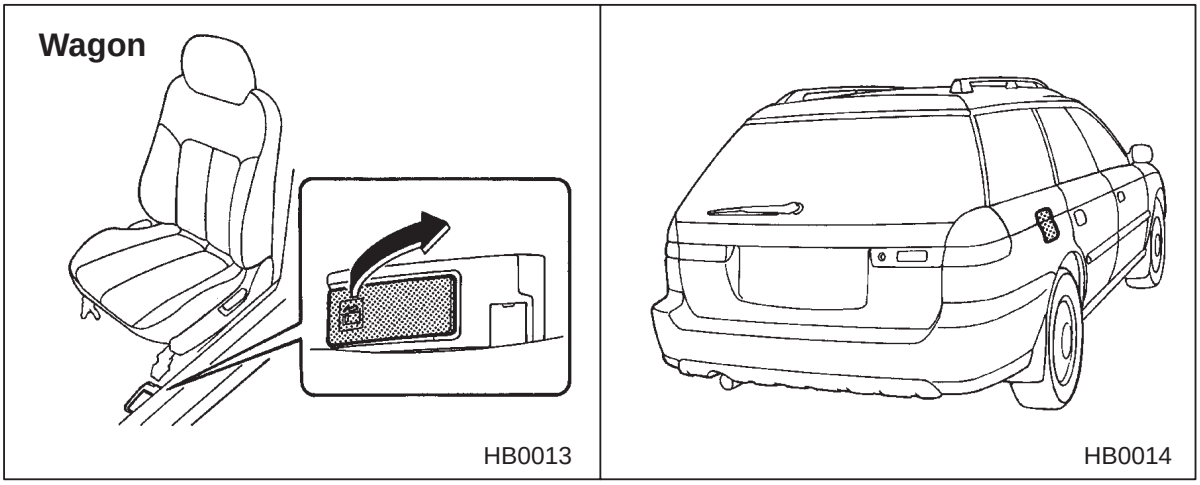

To open the fuel filler door, pull the door release lever up.
After refueling, be sure to close the fuel filler door completely.

■ Fuel filler cap

⚠ CAUTION

- **Make sure that the cap is tightened until it clicks to prevent fuel spillage in the event of an accident.**
- **Always use a genuine SUBARU fuel filler cap. If you use the wrong cap, it may not fit or have proper venting, and your fuel tank and emission control system might be damaged.**

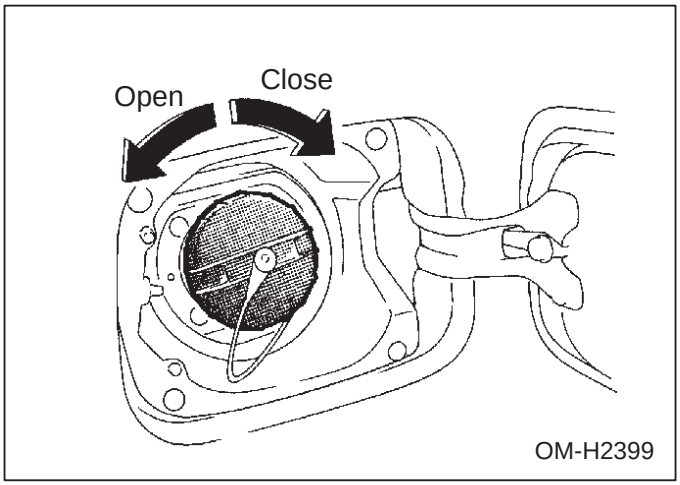

To take off the fuel filler cap, turn it slowly counterclockwise and remove the cap.

Downloaded from www.Manualslib.com manuals search engine

To put the cap back on, turn it clockwise until you hear a clicking noise. Be certain not to catch the cap tether under the cap while tightening.

NOTE

If the fuel filler cap is not tightened until it clicks or if the tether is caught under the cap, the CHECK ENGINE warning light may come on. Refer to the "Warning and Indicator Lights" section located in chapter 3.

■ Refueling

After the fuel filler nozzle has automatically stopped, do not add any more fuel.

If you spill any fuel on the painted surface, rinse it off immediately. Otherwise, the painted surface could be damaged. Such damage is not covered under the SUBARU Limited Warranty.

Engine hood

⚠ WARNING

Always check that the hood is properly locked before you start driving. If it is not, it might fly open while the vehicle is moving, blocking your view which may cause an accident and serious bodily injury.

– CONTINUED –

Downloaded from www.Manualslib.com manuals search engine

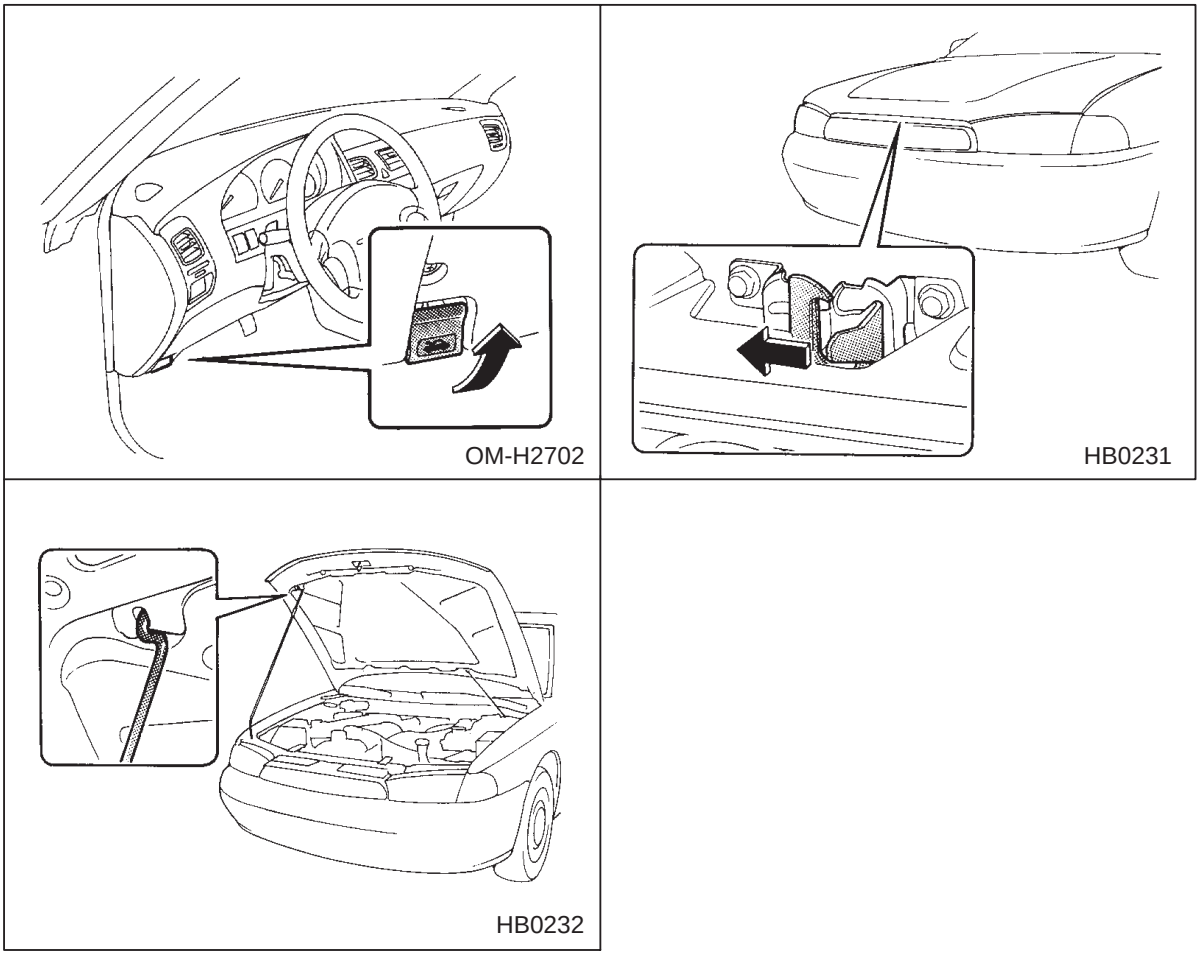

To open the hood:

1. Pull the hood release knob under the instrument panel.
2. Release the secondary hood release located under the front of the engine hood by moving the lever toward the left. Lift up the hood, release the hood prop from its retainer and put the end of the hood prop into the slot in the hood.

To close the hood:

1. Lift the hood slightly and remove the hood prop from the slot in the hood and return the prop to its retainer.
2. Lower the hood until it approaches about 6 in. (15 cm) from the closed position and let it drop.
3. After closing the hood, be sure the hood is securely locked.

If this does not close the hood, release it from a slightly higher position. Do not push the hood forcibly to close it. It could deform the engine hood.

Downloaded from www.Manualslib.com manuals search engine

Sunroof (Tilting/sliding sunroof – if equipped)

⚠ WARNING

- **Never let anyone's hands, arms, head or any objects protrude from the sunroof.**
- **Before closing the sunroof, make sure that no one's hands, arms, head or other objects will be accidentally caught in the sunroof.**

⚠ CAUTION

- **Do not sit on the edge of the open sunroof.**
- **Do not operate the sunroof if falling snow or extremely cold conditions have caused it to freeze shut.**

■ Operation

The sunroof has both tilting and sliding functions.

The sunroof operates only when the ignition switch is in the "ON" position.

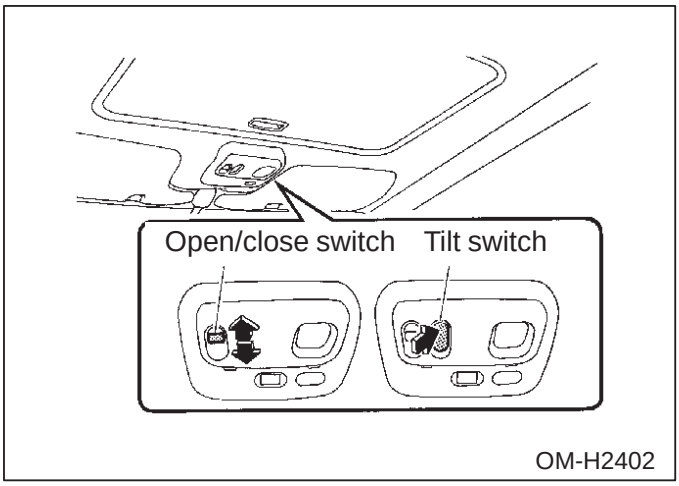

▼ To raise or lower the sunroof

The tilting function will only operate when the sunroof is fully closed.

Push the rear side of the "Tilt" switch to raise the sunroof.

– CONTINUED –

Downloaded from www.Manualslib.com manuals search engine

Push the front side of the “Tilt” switch to lower the sunroof.

Release the switch after the sunroof has been raised or has been lowered completely. Pushing the switch continuously may cause damage to the sunroof.

▼ To open or close the sunroof

Push the “Open/Close” switch rearward to open the sunroof. The sun shade will be also opened together with the sunroof.
Push the “Open/Close” switch forward to close the sunroof. The sunroof will stop halfway if you continue to press on the switch. Release the switch once and push it again to close the sunroof completely.

After washing the vehicle or after it rains, wipe away water on the roof prior to opening the sunroof to prevent water drops from falling into the passenger compartment.

▼ Sun shade

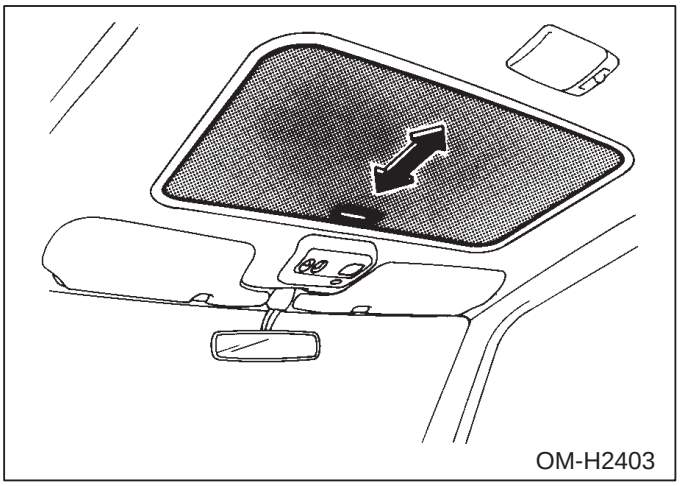

The sun shade can be slid forward or backward by hand while the sunroof is closed.
If the sunroof is opened, the sun shade also moves back.

■ Manual operation

If the sunroof cannot be closed with the sunroof switch, you can close the roof manually.
1. Take out the hex-headed wrench from the glove compartment and screwdriver from the tool bag.

Downloaded from www.Manualslib.com manuals search engine

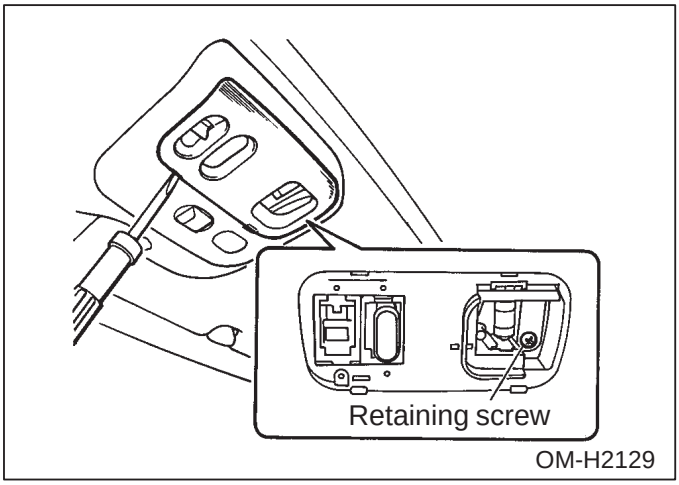

2. Remove the spot light lens by hand, then remove the switch body retaining screw and take off the sunroof switch.

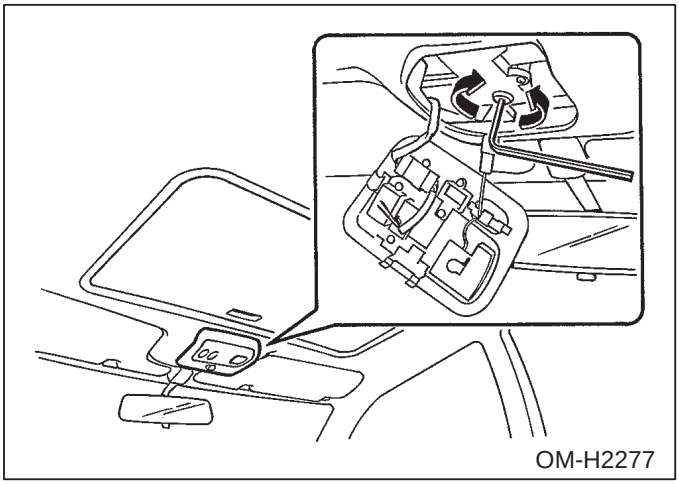

3. Insert the wrench in the end of the motor shaft.
- To lower the sunroof, turn the wrench clockwise.
- To close the sunroof, turn the wrench counterclockwise.

Have your vehicle checked by an authorized SUBARU dealer.

Downloaded from www.Manualslib.com manuals search engine

Sunroof
(Tandem sunroofs – if equipped)

⚠ WARNING

- **Never let anyone's hands, arms, head or any objects protrude from the sunroof.**
- **Before closing the sunroof, make sure that no one's hands, arms, head or other objects will be accidentally caught in the sunroof.**

⚠ CAUTION

- **Do not sit on the edge of the open sunroof.**
- **Do not operate the sunroof if falling snow or extremely cold conditions have caused it to freeze shut.**

■ Operation

The front sunroof has tilting function and the rear sunroof has sliding function.

Both sunroofs operate only when the ignition switch is in the "ON" position.

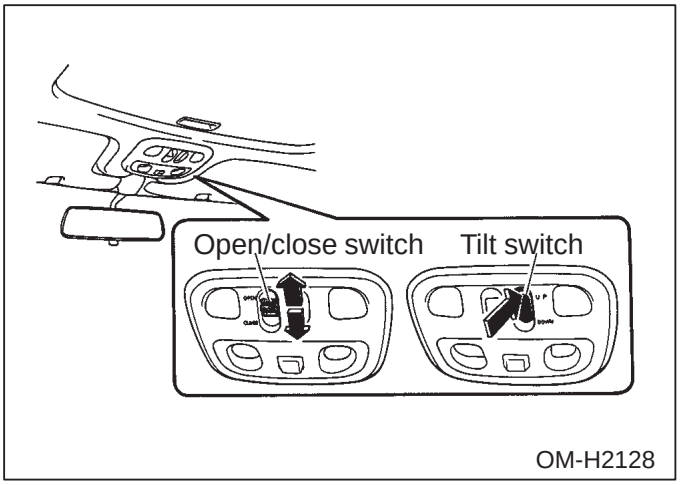

Downloaded from www.Manualslib.com manuals search engine

▼ To raise or lower the sunroof (for front sunroof)

Push the rear side of the “Tilt” switch to raise the front sunroof.
The front sunroof will stop halfway if you continue to press on the switch.
Release the switch once and push it again to raise the front sunroof completely.
Push the front side of the “Tilt” switch to lower the front sunroof. The front sunroof will stop halfway if you continue to press on the switch. Release the switch once and push it again to lower the front sunroof completely.
Release the switch after the front sunroof has been raised or has been lowered completely. Pushing the switch continuously may cause damage to the sunroof.

NOTE

It is preferable to use the front sunroof at the halfway open position if the rear sunroof is fully open. Driving with the front sunroof fully raised can generate a great deal of wind noise.

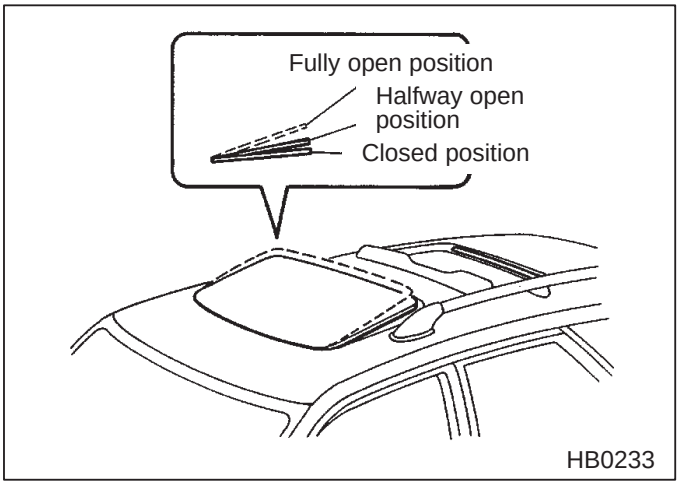

▼ To open or close the sunroof (for rear sunroof)

Push the “Open/Close” switch rearward to open the rear sunroof. The rear sun shade will be also opened together with the rear sunroof.
Push the “Open/Close” switch forward to close the rear sunroof. The rear sunroof will stop halfway if you continue to press on the switch. Release the switch once and push it again to close the rear sunroof completely.

– CONTINUED –

Downloaded from www.Manualslib.com manuals search engine

After washing the vehicle or after it rains, wipe away water on the roof prior to opening the sunroof to prevent water drops from falling into the passenger's compartment.

▼ Sun shades

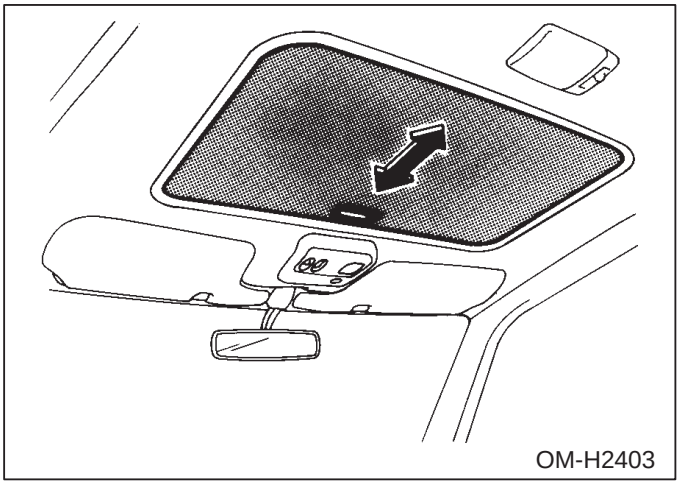

Front sun shade:
The front sun shade can be slid forward or backward by hand regardless of the sunroof position.

Rear sun shade:
The rear sun shade can be slid forward or backward by hand while the rear sunroof is closed. If the rear sunroof is opened, the sun shade also moves back.

■ Manual operation

Front sunroof:
The front sunroof cannot be closed manually. If the front sunroof can not be closed with the sunroof switch, have your vehicle checked or repaired by an authorized SUBARU dealer immediately.

Rear sunroof:
If the sunroof cannot be closed with the sunroof switch, you can close the rear sunroof manually.

1. Take out the hex-headed wrench from the glove compartment and screwdriver from the tool bag.

Downloaded from www.Manualslib.com manuals search engine

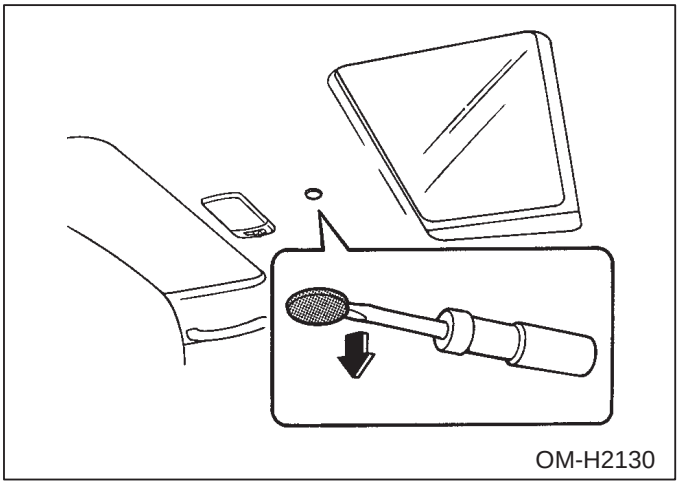

2. Remove the plug on the roof trim by inserting the end of the regular screwdriver between the roof and plug and prying it off.

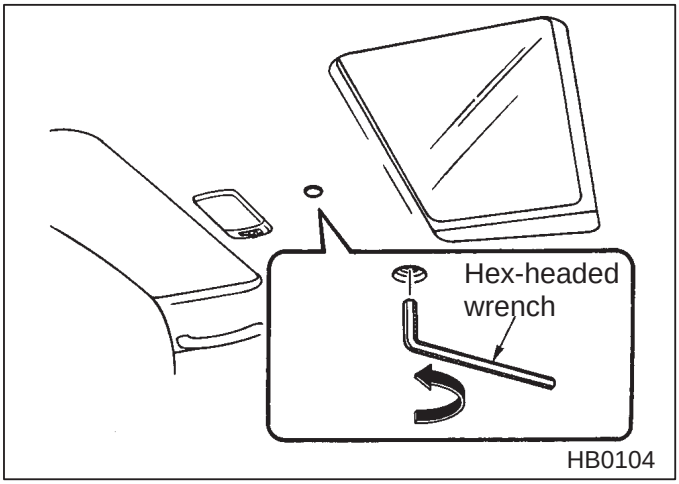

3. Insert the wrench in the end of the motor shaft.
To close the rear sunroof, turn the wrench counterclockwise.

Have your vehicle checked or repaired by an authorized SUBARU dealer.

Downloaded from www.Manualslib.com manuals search engine

Roof rail and crossbar/Roof rack (if equipped)

⚠ CAUTION

- **For cargo carrying purposes, the roof rail must be used together with a roof crossbar kit. The roof rail must never be used alone to carry cargo. Otherwise, damage to the roof or paint or a dangerous road hazard due to loss of cargo could result.**
- **When using the roof crossbar kit or the roof rack, make sure that the total load capacity of it and luggage does not exceed the maximum load limit. Overloading may cause damage to the vehicle and create a safety hazard.**

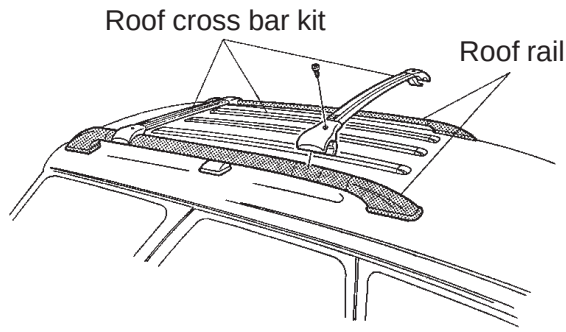

HB1013BB

Roof rack

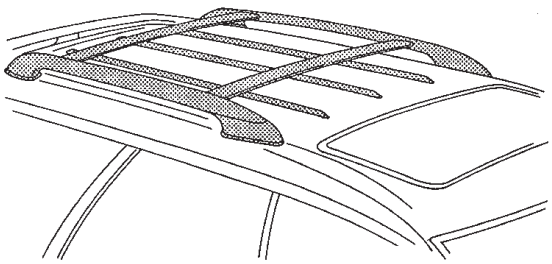

HB1010CB

The roof rail is not designed to carry cargo by itself. Luggage can be carried on the roof after securing the roof crossbar kit to the roof rail. When installing the roof crossbar kit on the roof rail, follow the manufacturer's instructions.

When you carry cargo on the roof using the roof crossbar kit or the roof rack, never exceed the maximum load limit explained below. You should also be careful that your vehicle does not exceed the Gross Vehicle Weight Rating (GVWR) and front and rear Gross Axle Weight Rating (GAWR). See the Loading Your Vehicle section in chapter 7 for information on loading cargo into or onto your vehicle.

Downloaded from www.Manualslib.com manuals search engine

■ When luggage is put on the slats

When using the roof rack or the roof crossbar kit, make sure the total load capacity of the luggage on the slats of the roof does not exceed **100 lb. (45 kg)**. Overloading may cause damage to the roof and create a safety hazard. Place the heaviest load at the bottom, nearest the roof, and evenly distribute the luggage. Always secure the luggage with straps, ropes or nets.

■ Installing carrying attachments on the crossbars

When installing any carrying attachment such as a bike carrier, ski carrier, kayak carrier, etc. on the crossbars, follow the manufacturer's instructions and make sure that the attachment is securely fixed to the crossbars. Use only attachments designed specifically for the crossbars. A set of the crossbars is designed to carry loads (luggage and attachment) of not more than **100 lb. (45 kg)**. Before operating the vehicle, make sure that the cargo is properly secured on the attachment.

NOTE

Remember that the vehicle's center of gravity is altered with the weight of the load on the roof, thus affecting the driving characteristics.
Drive carefully. Avoid rapid starts, hard cornering and abrupt stops. Crosswind effects will be increased.

■ Removal and installation of the crossbars (OUTBACK and OUTBACK Ltd.)

⚠ CAUTION

Do not carry cargo on the roof when the crossbars are removed. Luggage on the roof will be thrown forward or backward in sudden stops or rapid accelerations, resulting in a dangerous road hazard.

The crossbars for OUTBACK and OUTBACK Limited can be removed when you do not use the roof to carry cargo.

▼ To remove the crossbar

1. Loosen and remove the T–30 torx head screw from the top of each

– CONTINUED –

Downloaded from www.Manualslib.com manuals search engine

crossbar end support.
2. Rotate the lower clamp on the bottom of each end support downward approximately 90°.
3. Carefully raise the crossbar from roof rails.

▼ To install the crossbar

Front crossbar:
Front crossbar has 100 LBS. Load Label on left-hand side.

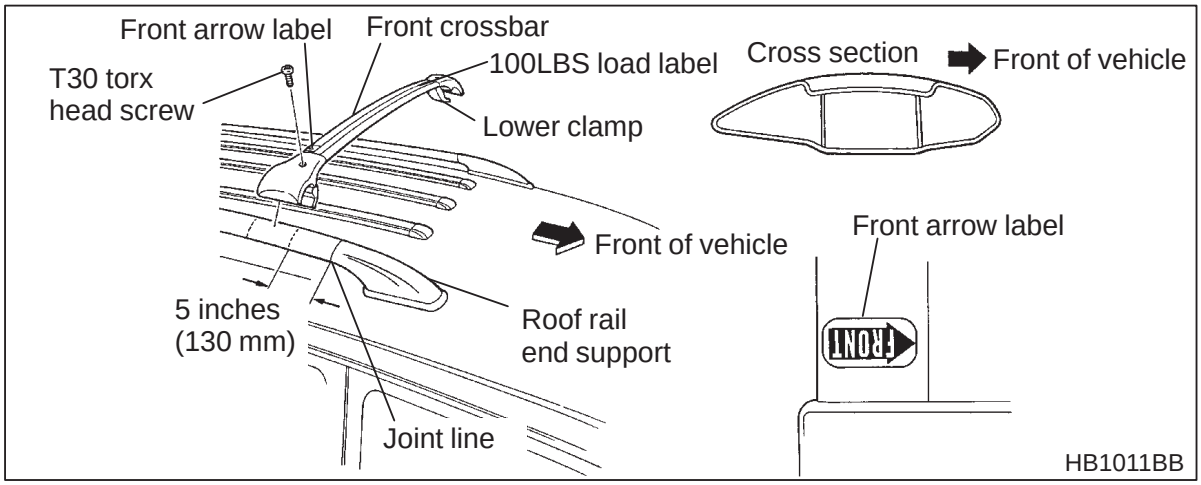

1. Before placing the crossbar on the roof rails, make sure that the T-30 torx head screw is removed from the top of each crossbar end support.
2. Rotate the lower clamp on the bottom of each end support downward approximately 90°.
3. With the front direction arrow label on the top right side of the crossbar pointing toward the front of the vehicle, carefully place the crossbar across the top of the vehicle so that the crossbar end supports rest on the top of the roof rails approximately 5 inches (130 mm) rearward from the seam (joint) between the front roof rail support and the roof rail.
4. Rotate (raise) the lower clamp up to the bottom of the roof rail and loosely tighten the T-30 torx head screw with the torx wrench provided, through the top of the end support and into the threaded insert in the lower clamp on each end of the crossbar.

Downloaded from www.Manualslib.com manuals search engine

NOTE

It may be necessary to squeeze the lower clamp and the end support together to compress the pads and gain a better alignment of the pieces while trying to start the screw. Use care not to crossthread the screw in the insert.

5. Adjust the alignment of the crossbar on the roof rails, and if available, use a T-30 Torx bit and torque wrench and tighten the T-30 torx head screws to 30 to 35 inch lbs. (3.4 to 4.0 N-m, 0.35 to 0.41 kg-m) of torque (or tighten securely with the torx wrench provided).

Rear crossbar:

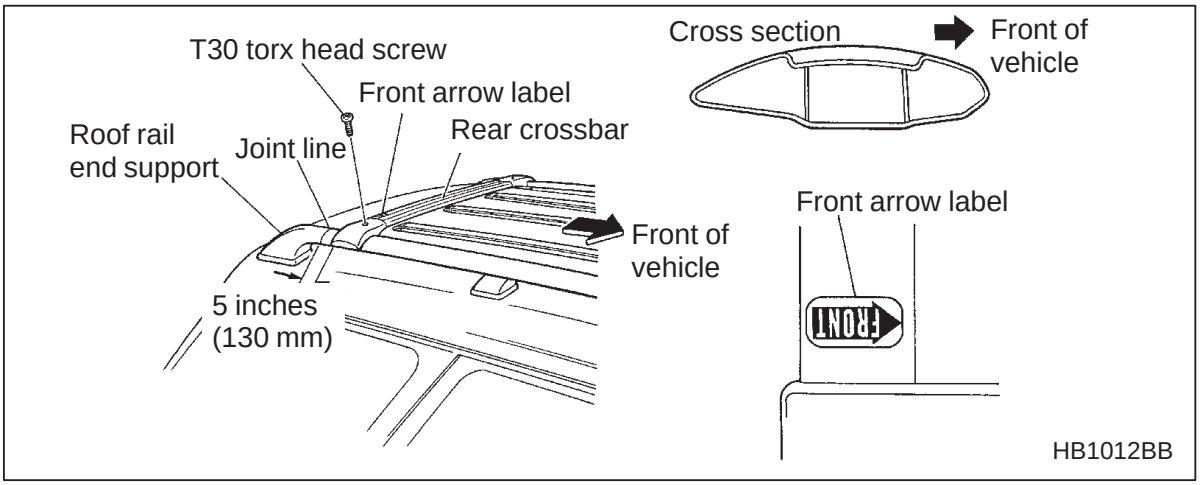

Install the rear crossbar in the same manner as the front crossbar.

NOTE

The rear crossbar should be positioned 5 inches (130 mm) forward of the rear seam (joint) between the rear roof rail support and the roof rail.

NOTE

Before each use of the roof rack, make sure the four T-30 crossbar clamp screws have been checked, and retightened if necessary to 35 inch lbs. (4.0 N-m, 0.41 kg-m), as outlined in Step #5 above.

Downloaded from www.Manualslib.com manuals search engine

Seat, seat belt and SRS AIRBAG

Front seats 2-2
- Fore and aft adjustment 2-5
- Reclining the seatback 2-5
- Height adjustment (if equipped) 2-5
- Head restraint adjustment 2-6
- Lumbar support (if equipped) 2-7
- Seat heater (if equipped) 2-7

Rear seats 2-9
- Fold down rear seat — Sedan 2-10
- Fold down rear seat — Wagon 2-11

3-point type seat belts (combination lap/shoulder belts) 2-15
- Seat belt warning light and chime 2-17
- Emergency Locking Retractor (ELR) function 2-17
- Automatic Locking Retractor (ALR) function 2-17
- Fastening the seat belt 2-18
- Unfastening the belt 2-19
- Adjusting the front seat shoulder belt anchor height 2-19

2-point type seat belts (lap only belts) 2-20
- Fastening the seat belt 2-21
- Unfastening the belt 2-22

Seat belt safety tips 2-23
- Infants or small children 2-23
- Children 2-23
- Expectant mothers 2-24
- Maintenance 2-24

Child restraint systems 2-25
- Installing child restraint systems in the 2-point type seat belt position (Rear center seating position) 2-27
- Installing child restraint systems in the 3-point type seat belt position 2-28
- Top strap anchors 2-29

SRS AIRBAG (Supplemental Restraint System Airbag) 2-31
- Vehicle with driver's and passenger's SRS AIRBAGs and lap/shoulder restraints 2-31
- SRS AIRBAG system operation 2-35
- System monitors 2-39
- System servicing 2-40
- Precautions against vehicle modification 2-41

Downloaded from www.Manualslib.com manuals search engine

Front seats

⚠ WARNING

- **Never adjust the seat while driving to avoid the possibility of loss of vehicle control and of personal injury.**
- **Never drive the vehicle with the head restraints removed because they are designed to reduce the risk of serious neck injury in the event that the vehicle is struck from the rear.**
- **Before adjusting the seat, make sure the hands and feet of rear seat passengers are clear of the adjusting mechanism.**
- **Seat belts provide maximum restraint when the occupant sits well back and upright in the seat. To reduce the risk of sliding under the seat belt in a collision, the front seatbacks should be always used in the upright position while the vehicle is running. If the front seatbacks are not used in the upright position in a collision, the risk of sliding under the lap belt and of the lap belt sliding up over the abdomen will increase, and both can result in serious internal injury or death.**
- **Do not put cushions or any other materials between occupants and seatbacks or seat cushions. If you do so, the risk of sliding under the lap belt and of the lap belt sliding up over the abdomen will increase, and both can result in serious internal injury or death.**
- **The SRS AIRBAGs deploy with considerable speed and force. Occupants who are out of proper position when the SRS AIRBAG deploys could suffer very serious injuries. Because the SRS AIRBAG needs enough space for deployment, the driver should always sit upright and well back in the seat as far from the steering wheel as practical while still maintaining full vehicle control and the front passenger should move the seat as far back as possible and sit upright and well back in the seat.**
- **Put children aged 12 and under in the rear seat properly restrained at all times. The SRS AIRBAG deploys with considerable speed and force and can injure or even kill children, especially if they are 12 years of age and under and are not restrained or improperly restrained. Because children are lighter and weaker than**

Downloaded from www.Manualslib.com manuals search engine

adults, their risk of being injured from deployment is greater. For that reason, we strongly recommend that ALL children (including those in child seats and those that have outgrown child restraint devices) sit in the REAR seat properly restrained at all times in a child restraint device or in a seat belt, whichever is appropriate for the child's age, height and weight.

Secure ALL types of child restraint devices (including forward facing child seat) in the REAR seats at all times.

NEVER INSTALL A REARWARD FACING CHILD SEAT IN THE FRONT SEAT. DOING SO RISKS SERIOUS INJURY OR DEATH TO THE CHILD BY PLACING THE CHILD'S HEAD TOO CLOSE TO THE SRS AIRBAG.

According to accident statistics, children are safer when properly restrained in the rear seating positions than in the front seating positions. For instructions and precautions concerning child restraint systems, see the Child Restraint System section in this chapter.

– CONTINUED –

Downloaded from www.Manualslib.com manuals search engine

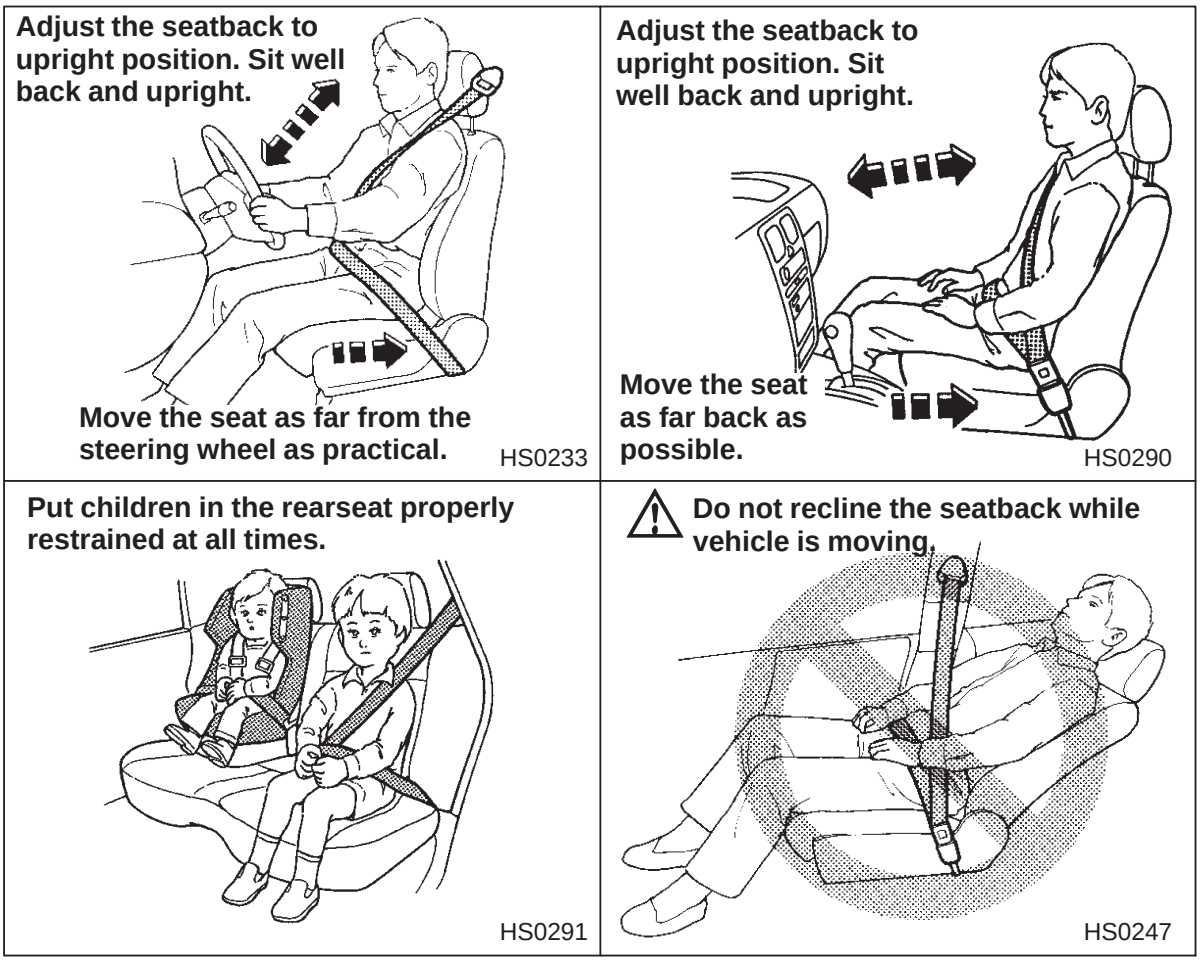

⚠ CAUTION

Metallic parts of the seat belt can become very hot in a vehicle that has been closed up in sunny weather; they could burn an occupant. Do not touch such hot parts.

Downloaded from www.Manualslib.com manuals search engine

■ Fore and aft adjustment

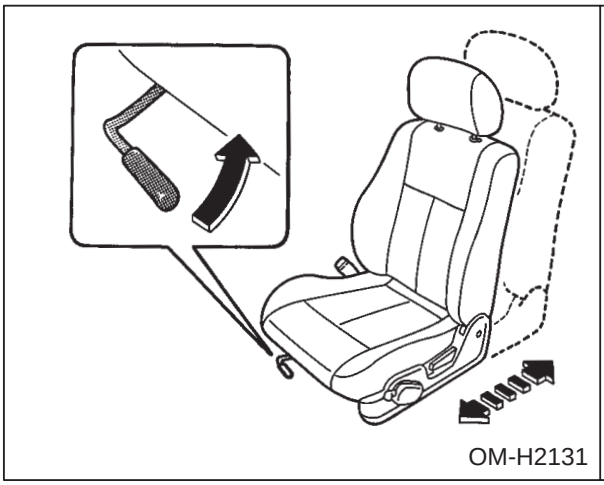
OM-H2131

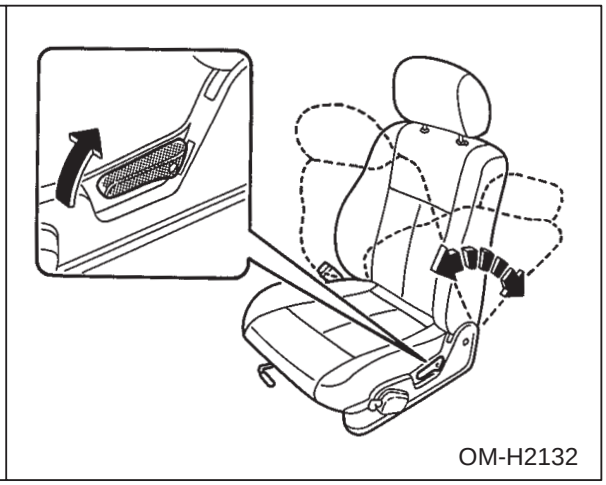
OM-H2132

Pull the lever upward and slide the seat to the desired position. Then release the lever and move the seat back and forth to make sure that it is securely locked into place.

■ Reclining the seatback

Pull the reclining lever up and adjust the seatback to the desired position. Then release the lever and make sure the seatback is securely locked into place.

■ Height adjustment (if equipped)

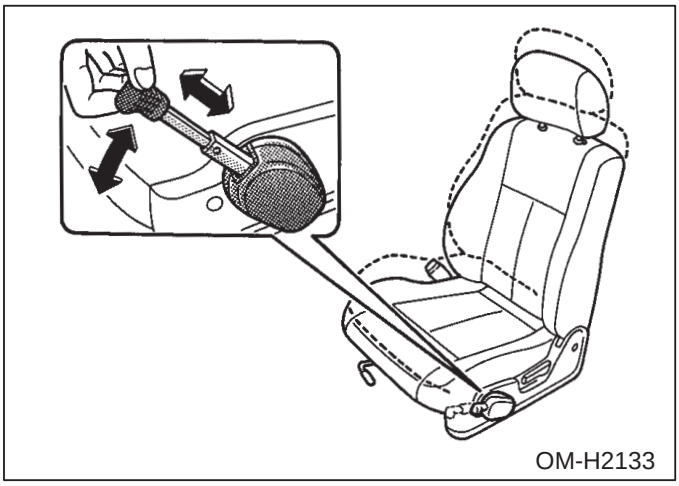
OM-H2133

Pull the adjustment lever out and move it up or push it down to raise or lower the seat.

– CONTINUED –

Downloaded from www.Manualslib.com manuals search engine

■ Head restraint adjustment

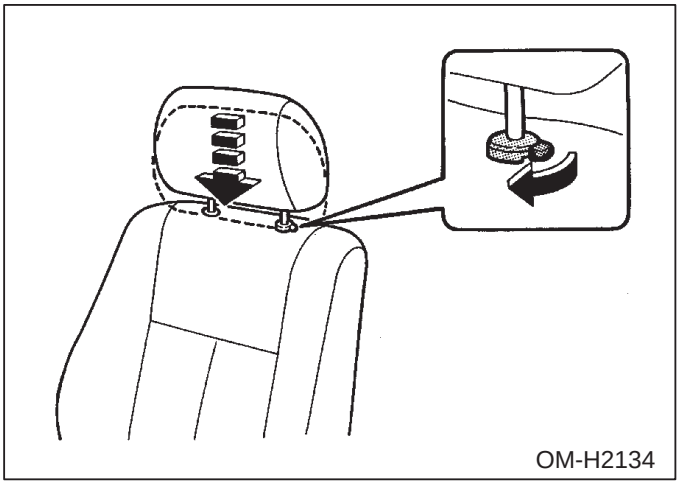

To raise the head restraint, pull it up. To lower it, push the head restraint down while turning the release knob on the top of the seatback.

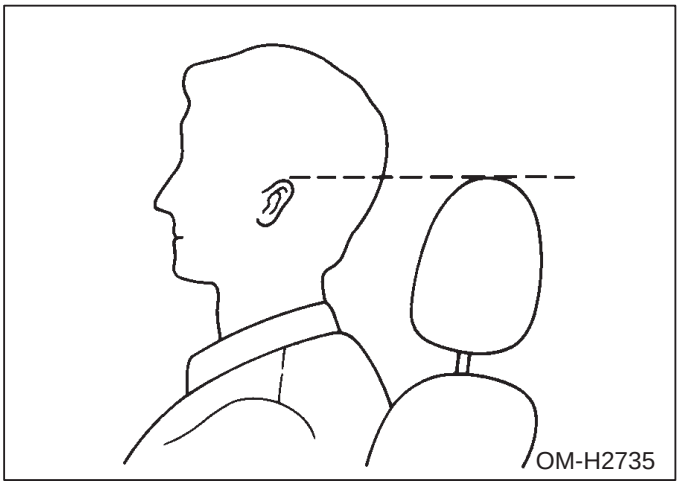

The best position for the head restraint is just above or level with the top of the ears.

Downloaded from www.Manualslib.com manuals search engine

■ Lumbar support (if equipped)

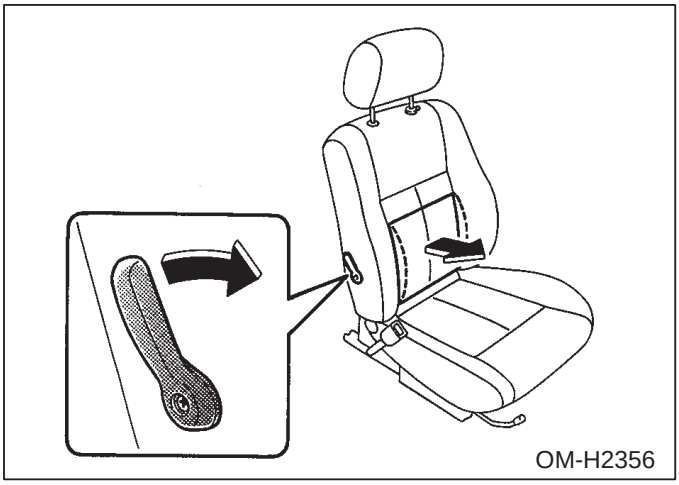

Pull the lever forward or backward.
Pulling the lever forward will increase the amount of support for your lower back.

■ Seat heater (if equipped)

⚠ CAUTION

- **Do not use the seat heater when the engine is not running. The battery could run down if the heater is operated while the engine is not running.**
- **Do not put anything on the seat which insulates against heat, such as a blanket, cushion, or similar items. This may cause the seat heater to overheat.**
- **When cleaning the seat, do not use benzine, paint thinner, or any similar materials.**

The seat heater operates when the ignition switch is either in the “ACC” or “ON” position.

– CONTINUED –

Downloaded from www.Manualslib.com manuals search engine

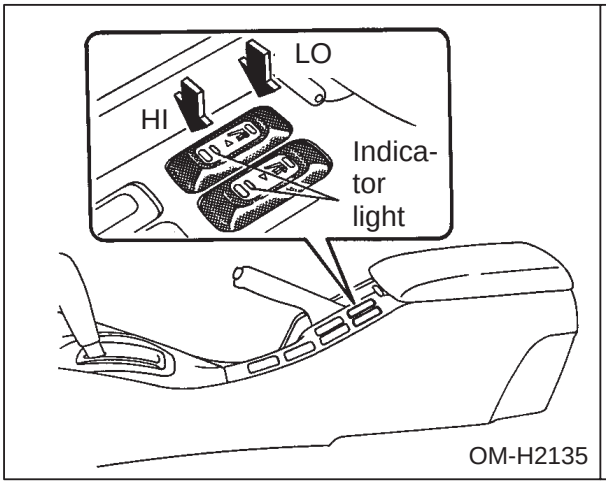

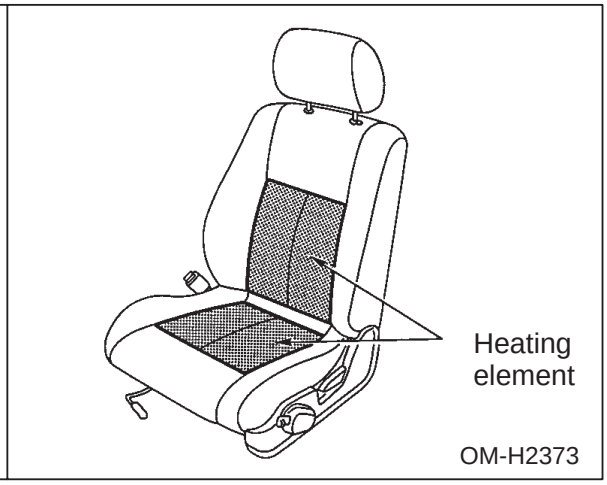

To turn on the seat heater, push the “LO” or “HI” position on the switch, as desired, depending on the temperature.

LO: Normal heating

HI: Rapid heating

The indicator located on the switch comes on when the seat heater in operation. When the vehicle’s interior is warmed enough or before you leave the vehicle, be sure to turn the switch off.

Downloaded from www.Manualslib.com manuals search engine

Rear seats

⚠ WARNING

- **Seat belts provide maximum restraint when the occupant sits well back and upright in the seat. Do not put cushions or any other materials between occupants and seatbacks or seat cushions. If you do so, the risk of sliding under the lap belt and of the lap belt sliding up over the abdomen will increase, and both can result in serious internal injury or death.**
- **Never allow passengers to ride on the folded rear seatback, in the trunk or in the cargo area. Doing so may result in serious injury.**
- **Never stack luggage or other cargo higher than the top of the seatback because it could tumble forward and injure passengers in the event of a sudden stop or accident.**
- **Secure skis and other lengthy items properly to prevent them from shooting forward and causing serious injury during a sudden stop.**

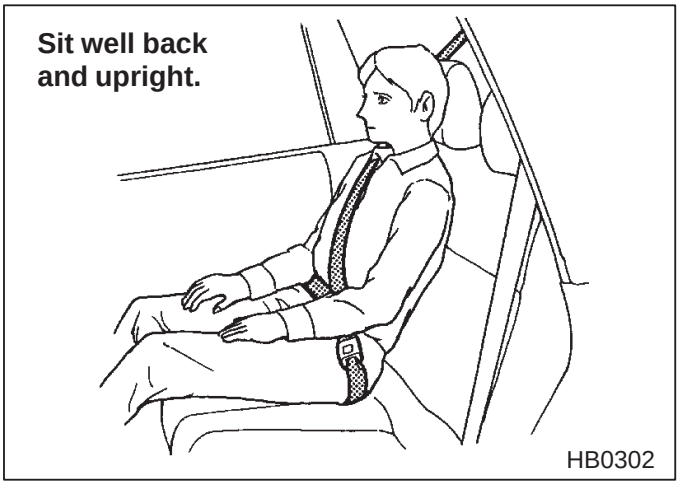

– CONTINUED –

Downloaded from www.Manualslib.com manuals search engine

⚠ CAUTION

Metallic parts of the seat belt can become very hot in a vehicle that has been closed up in sunny weather; they could burn a occupant. Do not touch such hot parts.

■ Fold down rear seat — Sedan

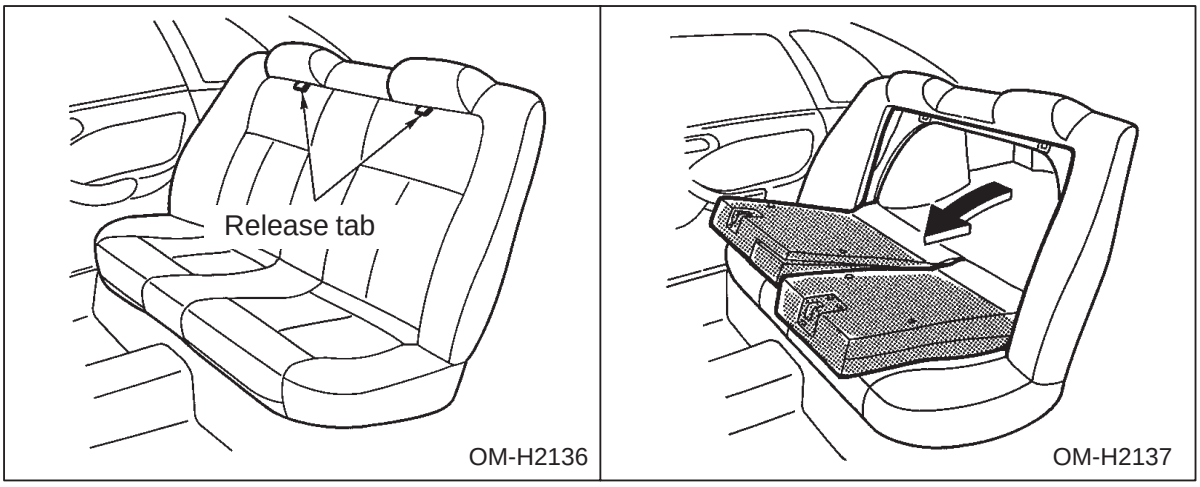

To fold the seatback down, pull the release tab attached to the top of the seatback. To restore it, push the seatback up to its original position until it locks. Be sure to confirm that it is locked in place.

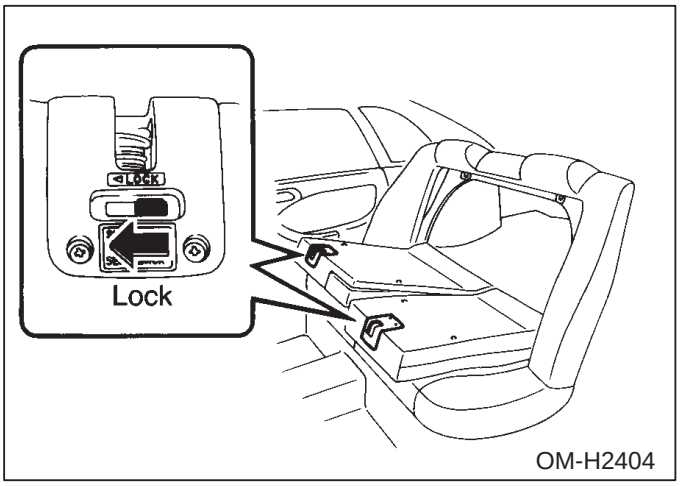

To cancel the fold down function, slide the lock knob located on the backside of the seatback to the “LOCK” position and close the seatback.

Downloaded from www.Manualslib.com manuals search engine

▼ Armrest (if equipped)

⚠ WARNING

To avoid the possibility of serious injury, passengers must never be allowed to sit on the center armrest while the vehicle is in motion.

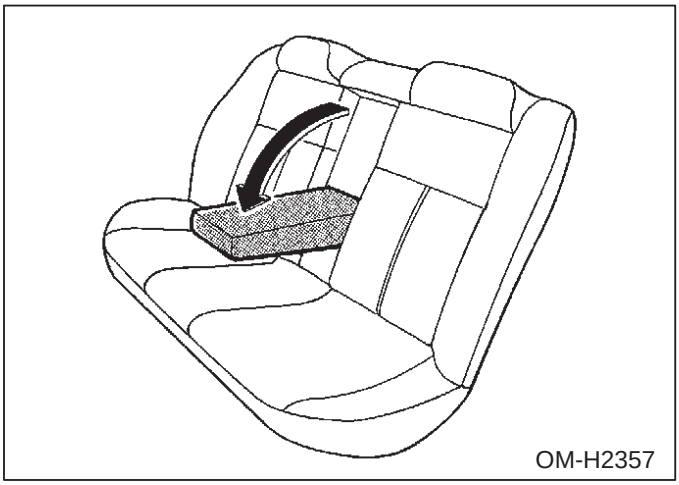

To lower the armrest, pull on the top edge of the armrest.

■ Fold down rear seat — Wagon

⚠ WARNING

After returning the rear seat to its original position, be certain to place all of the seat belts and the tab attached to the seat cushion above the seat cushion. And make certain that the shoulder belts are fully visible.

– CONTINUED –

Downloaded from www.Manualslib.com manuals search engine

▼ Folding down the seatback

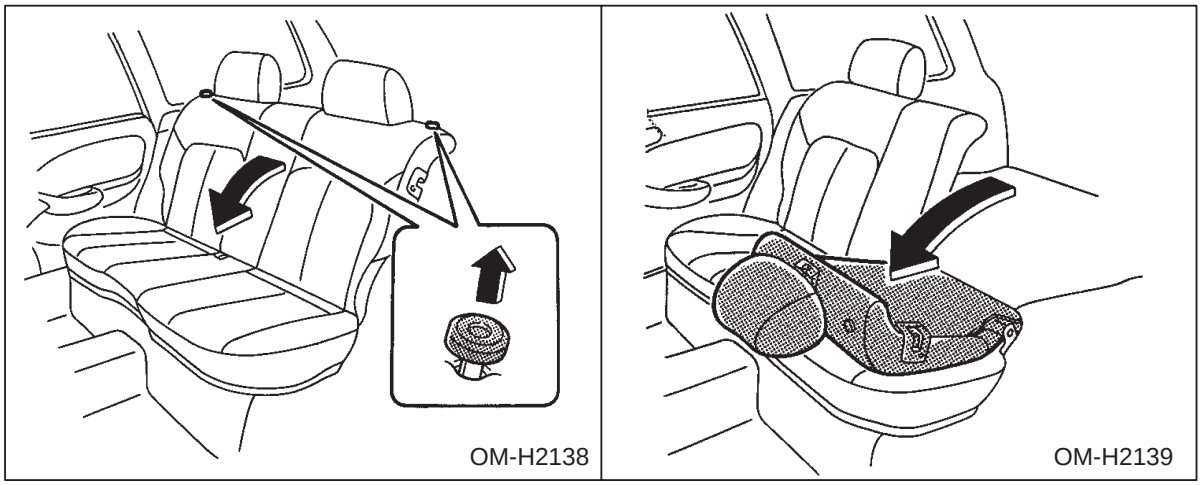

Unlock the seatback by pulling the release knob and fold it down.

▼ Folding down the seat cushion and seatback

1. Move the front seat forward.
2. (If your vehicles' rear seatbacks are equipped with head restraints.) To remove the head restraint, pull the head restraint up while turning the release knob located on the backside of the set-back.

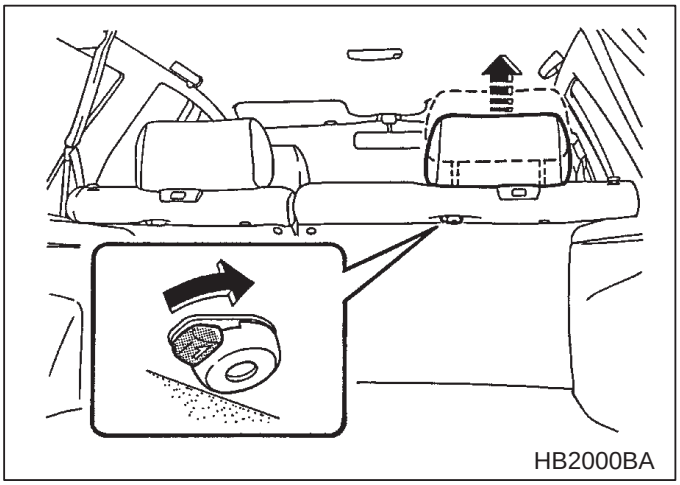

3. Store the seat belts in the seat belt pocket to prevent them falling below the cushion.

Downloaded from www.Manualslib.com manuals search engine

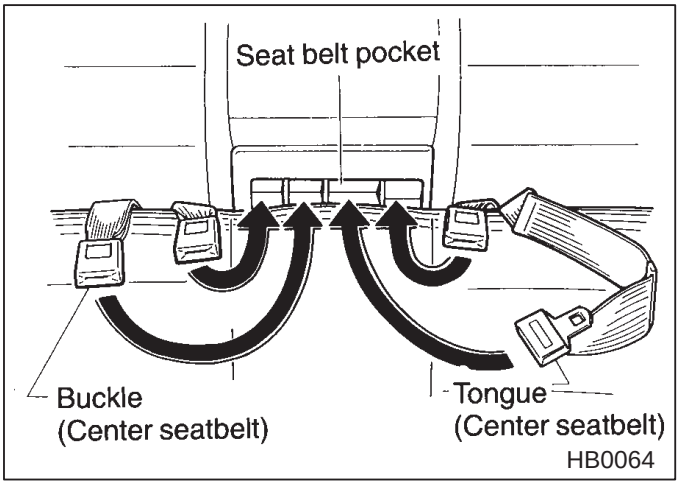

4. Raise the seat cushion by pulling up the tab.

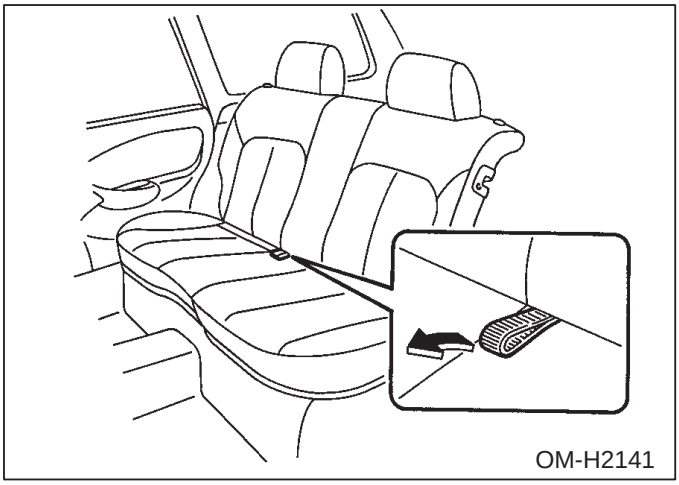

5. Unlock the seatback by pulling the release knob and fold it down. Confirm that the pin located at the bottom of the seat cushion is inserted into the slot at the top of the seatback.

– CONTINUED –

Downloaded from www.Manualslib.com manuals search engine

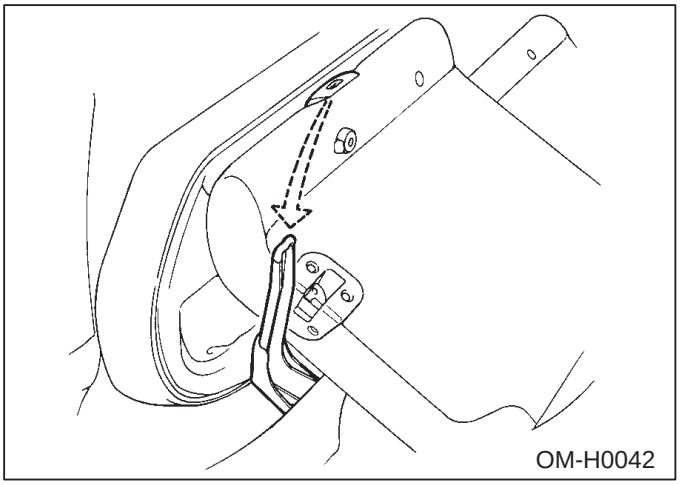

6. Install the head restraints onto the backside of the seatback.

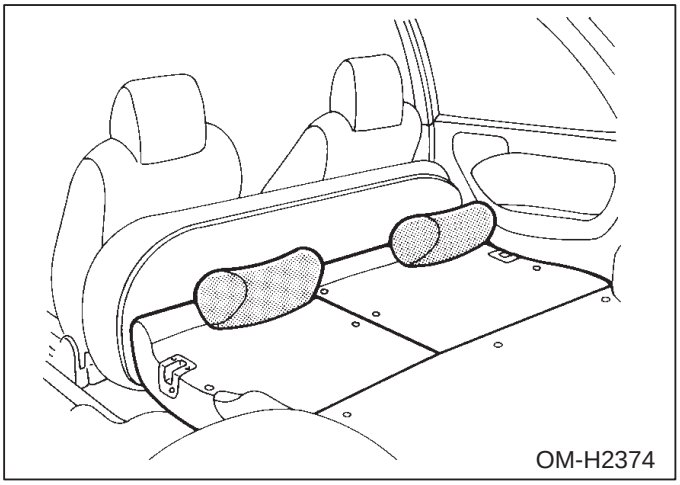

To return the rear seat to its original position, raise the seatback and seat cushion until it locks into place and make sure that they are securely locked.

Make sure that the rear seat belts are not under the seat cushion or seat-back.

Place the head restraints (if so equipped) back in their normal position.

Downloaded from www.Manualslib.com manuals search engine

3-point type seat belts (Combination lap/shoulder belts)

⚠ WARNING

- **Never use a belt that is twisted or reversed. In an accident, this can increase the risk or severity of injury.**
- **Never place the shoulder belt under the arm or behind the back. If an accident occurs, this can increase the risk or severity of injury.**
- **Keep the lap belt as low as possible on your hips. In a collision, this spreads the force of the lap belt over stronger hip bones instead of across the weaker abdomen.**
- **Seat belts provide maximum restraint when the occupant sits well back and upright in the seat. To reduce the risk of sliding under the seat belt in a collision, the front seatbacks should be always used in the upright position while the vehicle is running. If the front seatbacks are not used in the upright position in a collision, the risk of sliding under the lap belt and of the lap belt sliding up over the abdomen will increase, and both can result in serious internal injury or death.**
- **Do not put cushions or any other materials between occupants and seatbacks or seat cushions. If you do so, the risk of sliding under the lap belt and of the lap belt sliding up over the abdomen will increase, and both can result in serious internal injury or death.**
- **Put children aged 12 and under in the rear seat properly restrained at all times. The SRS AIRBAG deploys with considerable speed and force and can injure or even kill children, especially if they are 12 years of age and under and are not restrained or improperly restrained. Because children are lighter and weaker than adults, their risk of being injured from deployment is greater. For that reason, we strongly recommend that ALL children (including those in child seats and those that have outgrown child restraint devices) sit in the REAR seat properly restrained at all times in a child restraint device or in a seat belt, whichever is appropriate for the child's age, height and weight.**

– CONTINUED –

Downloaded from www.Manualslib.com manuals search engine

Secure ALL types of child restraint devices (including forward facing child seats) in the REAR seats at all times.
NEVER INSTALL A REARWARD FACING CHILD SEAT IN THE FRONT SEAT. DOING SO RISKS SERIOUS INJURY OR DEATH TO THE CHILD BY PLACING THE CHILD'S HEAD TOO CLOSE TO THE SRS AIRBAG.
According to accident statistics, children are safer when properly restrained in the rear seating positions than in the front seating positions. For instructions and precautions concerning child restraint systems, see the Child Restraint System section in this chapter.

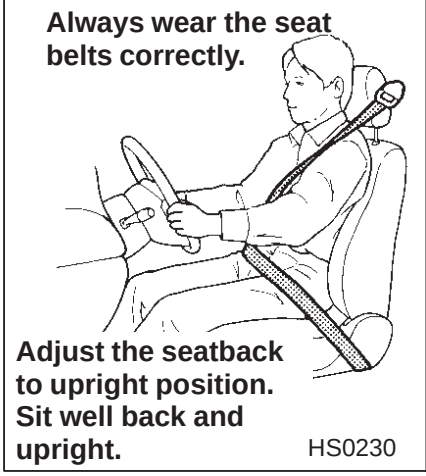

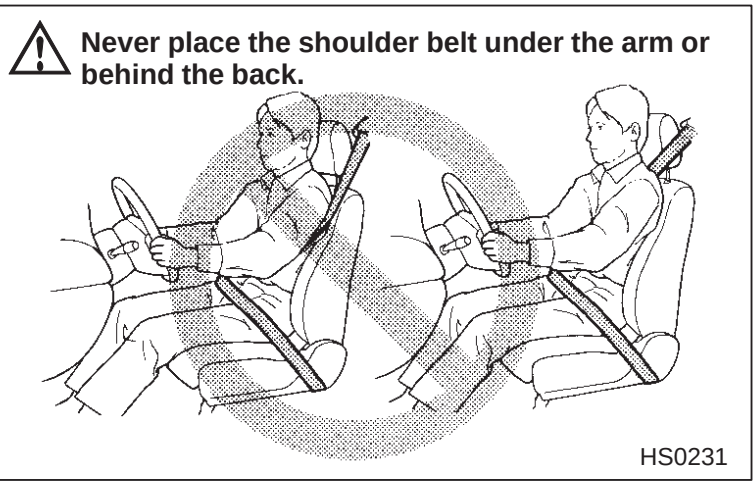

⚠ CAUTION

Metallic parts of the seat belt can become very hot in a vehicle that has been closed up in sunny weather; they could burn an occupant. Do not touch such hot parts.

Downloaded from www.Manualslib.com manuals search engine

■ Seat belt warning light and chime

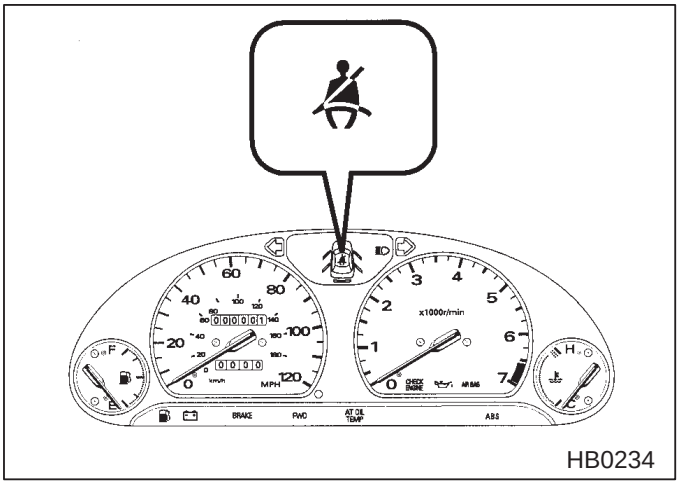

Your vehicle is equipped with a seat belt warning device at the driver's seat.
This device causes the seat belt warning light on the instrument panel to light up for about six seconds when the ignition switch is turned to the "ON" position to remind the driver to wear the seat belt. If the driver's seat belt is not fastened, a warning chime sounds at the same time.

■ Emergency Locking Retractor (ELR) function

3-point type seat belts have an emergency locking retractor. This allows normal body movement but the retractor locks automatically during a sudden stop, impact or if you pull the belt very quickly out of the retractor.

■ Automatic Locking Retractor (ALR) function

When securing a child restraint system on the passengers' seats, the three-point type seat belt must be changed over to the Automatic Locking Retractor (ALR) mode.

When the child restraint system is removed, make sure that the retractor operates as an Emergency Locking Retractor (ELR).
For instructions on how to convert the retractor to the ALR mode and restore it to the ELR mode, see the "Child Restraint System" section in this chapter.

– CONTINUED –

Downloaded from www.Manualslib.com manuals search engine

■ Fastening the seat belt

⚠ CAUTION

Metallic parts of the seat belt can become very hot in a vehicle that has been closed up in sunny weather; they could burn an occupant. Do not touch such hot parts.

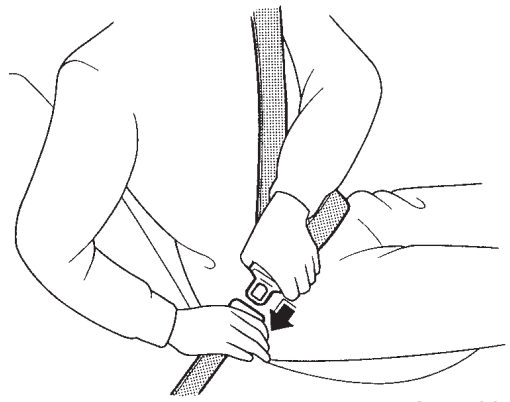

OM-H0043

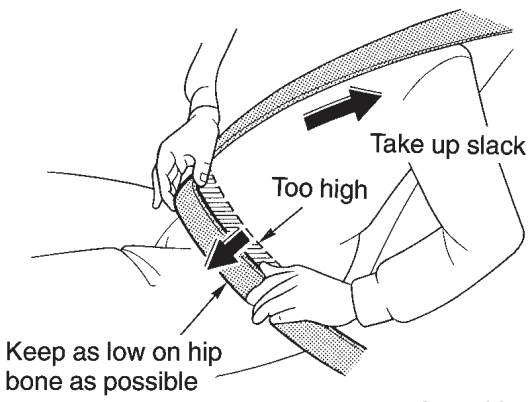

OM-H0044

1. Adjust the seat position:

Driver's seat: Move the seat back as far from the steering wheel as practical while still maintaining full vehicle control and adjust the seatback to the upright position.

Front passenger's seat: Move the seat as far back as possible and adjust the seatback to the upright position.

2. Sit well back in the seat.
3. Pick up the tongue plate and pull the belt out slowly. Do not let it get twisted. If the belt stops before reaching the buckle, return the belt slightly and pull it out more slowly.
4. Insert the tongue plate into the buckle until you hear a click.

For the driver's side seat belt, a seat belt warning device is provided; if the driver is not wearing the seat belt with the ignition in the "ON" position, the warning light on the instrument panel comes on and a warning chime also sounds to remind the driver to wear the seat belt.

Refer to Warning and Indicator Lights section (chapter 3) for more details.

Downloaded from www.Manualslib.com manuals search engine

5. To make the lap part tight, pull up on the shoulder belt. And place the lap belt as low as possible on your hips, not on your waist.

■ Unfastening the belt

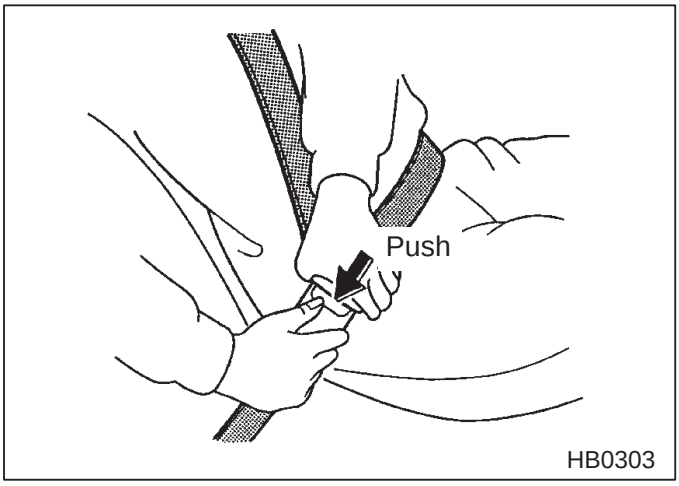

Push the button on the buckle.

Before closing the door, make sure that the belts are retracted properly, to avoid catching the belt webbing in the door.

■ Adjusting the front seat shoulder belt anchor height

⚠ WARNING

When wearing the front seat belts, make sure the shoulder portion of the webbing does not pass over your neck. If it does, adjust the seat belt anchor to a lower position. Placing the shoulder belt over the neck may result in neck injury during sudden braking or in a collision.

– CONTINUED –

Downloaded from www.Manualslib.com manuals search engine

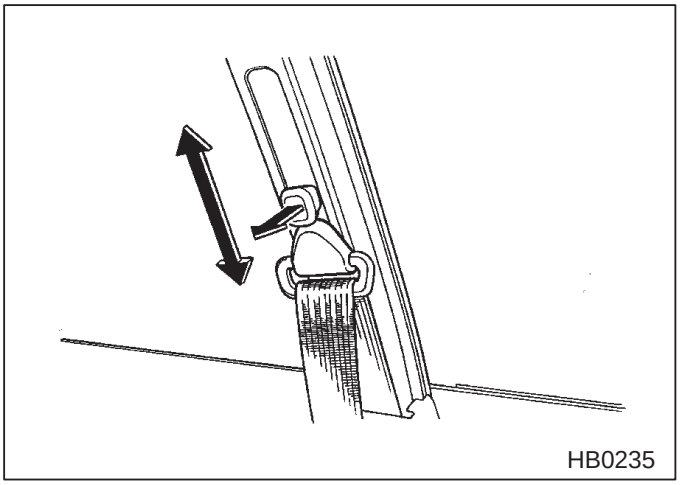

The shoulder belt anchor height should be adjusted to the position best for you. To adjust the anchor height, pull the release knob and move the anchor to the desired position so that the shoulder belt passes over the middle of the shoulder without touching the neck.

2-point type seat belts (lap only belts)

⚠ WARNING

- **Seat belts provide maximum restraint when the occupant sits well back and upright in the seat. Do not put cushions or any other materials between occupants and seatbacks or seat cushions. If you do so, the risk of sliding under the lap belt and of the lap belt sliding up over the abdomen will increase, and both can result in serious internal injury or death.**
- **Never use a belt that is twisted or reversed. In an accident, this can increase the risk or severity of injury.**
- **Keep the lap belt as low as possible on your hips. In a collision, this spreads the force of the lap belt over stronger hip bones instead of across the weaker abdomen.**

Downloaded from www.Manualslib.com manuals search engine

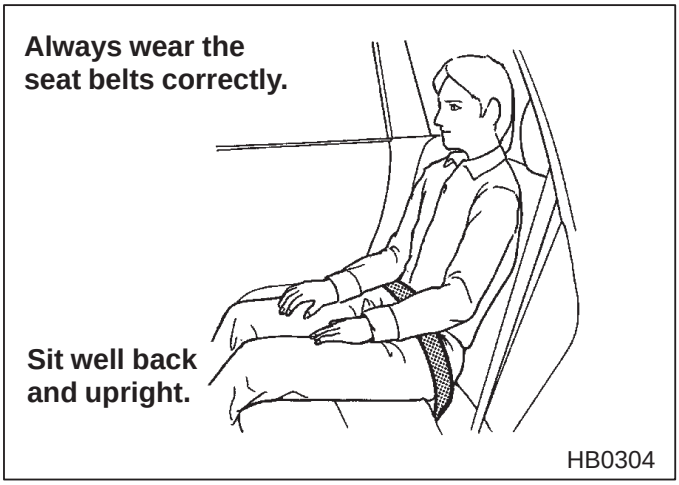

⚠ CAUTION

Metallic parts of the seat belt can become very hot in a vehicle that has been closed up in sunny weather; they could burn an occupant. Do not touch such hot parts.

The 2-point type seat belt has a manual adjustment device.

■ Fastening the seat belt

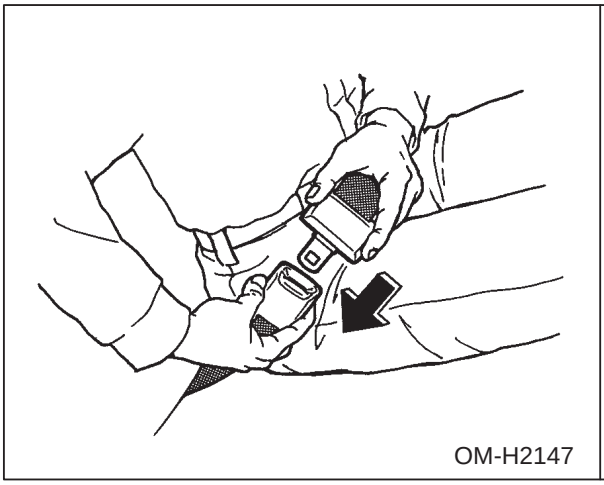

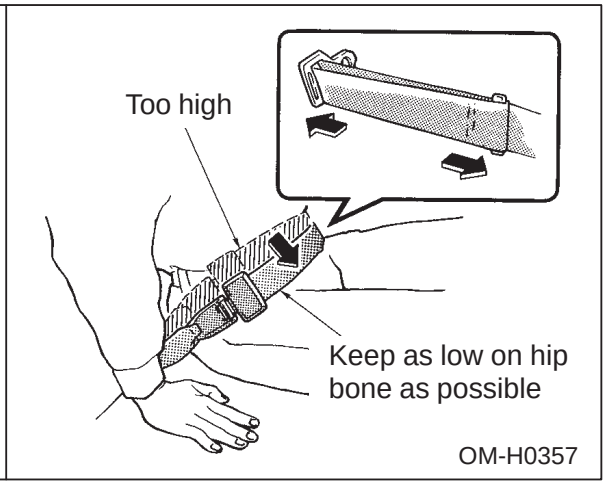

1. Sit well back in the seat and pick up the tongue plate marked “CENTER”. Be careful not to twist the belt.
2. Insert the tongue plate into the buckle marked “CENTER” until you hear a click. The tongue plate marked “CENTER” can be fastened only into the buckle marked “CENTER”. If the belt is not long enough for you,

– CONTINUED –

Downloaded from www.Manualslib.com manuals search engine

hold the tongue plate at a right angle to the belt and pull the belt to extend.
3. To make the belt tight, pull up on the belt. And place the lap belt as low as possible on your hips, not on your waist.

■ Unfastening the belt

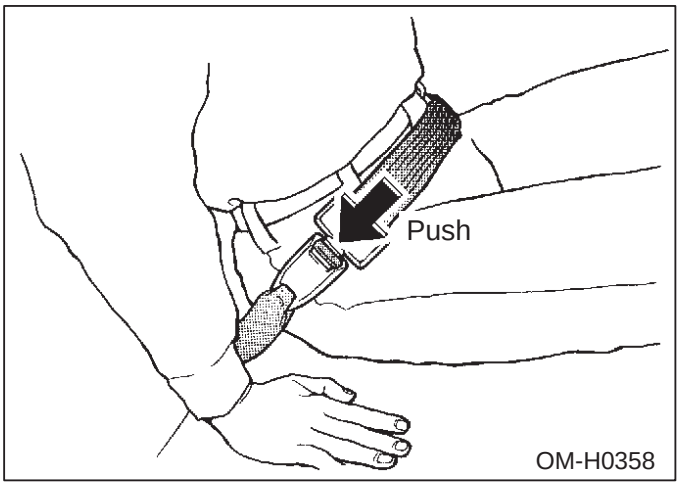

Push the button on the buckle.

When the belt is not in use, buckle the belt to prevent it from being caught in the door.

NOTE
When folding down the rear seat of the wagon, store the seat belts in the seat belt pocket to prevent them falling below the cushion.

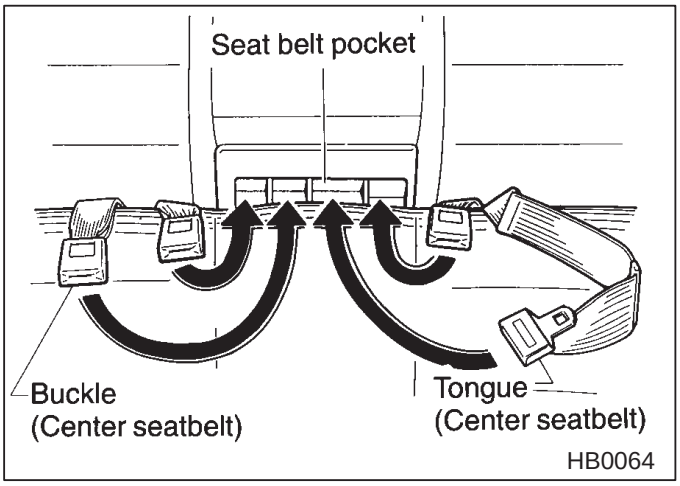

Downloaded from www.Manualslib.com manuals search engine

Seat belt safety tips

⚠ WARNING

- **All persons in the vehicle should fasten their seat belts BEFORE the vehicle starts to move. Otherwise, the possibility of serious injury becomes greater in the event of a sudden stop or accident.**
- **All belts should fit snugly in order to provide full restraint. Loose fitting belts are not as effective in preventing or reducing injury.**
- **Each seat belt is designed to support only one person. Never use a single belt for two or more persons — even children. Otherwise, in an accident, serious injury or death could result.**
- **Replace all seat belt assemblies including retractors and attaching hardware worn by occupants of a vehicle that has been in a serious accident. The entire assembly should be replaced even if damage is not obvious.**

■ Infants or small children

Use a child restraint system that is suitable for your vehicle. See information on “Child Restraint System” in this chapter.

■ Children

If a child is too big for a child restraint system, the child should sit in the rear seat and be restrained using the seat belts. According to accident statistics, children are safer when properly restrained in the rear seating positions than in the front seating positions. Never allow a child to stand up or kneel on the seat.

If the shoulder portion of the belt crosses the face or neck, move the child closer to the center of vehicle to help provide a good shoulder belt fit. If the shoulder portion of the belt cannot be properly positioned, a child restraint system should be used. If that is not possible, the child should sit in the center rear seat and use the 2-point type seat belt. Care must be taken to securely place the lap belt as low as possible on the

– CONTINUED –

Downloaded from www.Manualslib.com manuals search engine

hips and not on the child's waist.

■ Expectant mothers

Expectant mothers also need to use the seat belts. They should consult their doctor for specific recommendations. The lap belt should be worn securely and as low as possible over the hips, not over the waist.

■ Maintenance

⚠ CAUTION

- **Keep the belts free of polishes, oils, chemicals and particularly battery acid.**
- **Never attempt to make modifications or changes that will prevent the seat belt from operating properly.**

To clean the seat belts, use a mild soap and lukewarm water. Never bleach or dye the belts because this could seriously affect their strength.

Inspect the seat belts and attachments including the webbing and all hardware periodically for cracks, cuts, gashes, tears, damage, loose bolts or worn areas. Replace the seat belts even if only minor damage is found.

Downloaded from www.Manualslib.com manuals search engine

Child restraint systems

⚠ WARNING

- **Never let a passenger hold a child on his or her lap while the vehicle is moving. The passenger cannot protect the child from injury in a collision, because the child will be caught between the passenger and objects inside the vehicle. Additionally, holding a child in your lap or arms in the front seat exposes that child to another serious danger. Since the SRS AIRBAG deploys with considerable speed and force, the child could be injured or even killed.**
- **Put children aged 12 and under in the rear seat properly restrained at all times. The SRS AIRBAG deploys with considerable speed and force and can injure or even kill children, especially if they are 12 years of age and under and are not restrained or improperly restrained. Because children are lighter and weaker than adults, their risk of being injured from deployment is greater.**

For that reason, be sure to secure ALL types of child restraint devices (including forward facing child seats) in the REAR seats at all times. You should choose a restraint device which is appropriate for the child's age, height and weight. According to accident statistics, children are safer when properly restrained in the rear seating positions than in the front seating positions.

- **SINCE YOUR VEHICLE IS EQUIPPED WITH A PASSENGER'S SRS AIRBAG, DO NOT INSTALL A REARWARD FACING CHILD SEAT IN THE FRONT PASSENGER'S SEAT. DOING SO RISKS SERIOUS INJURY OR DEATH TO THE CHILD BY PLACING THE CHILD'S HEAD TOO CLOSE TO THE SRS AIRBAG.**
- **Children should be properly restrained in the rear seat at all times. Never allow a child to stand up, or to kneel on the front passenger's seat. The SRS AIRBAG deploys with considerable force and can injure or even kill the child.**

– CONTINUED –

Downloaded from www.Manualslib.com manuals search engine

Secure child restraint devices in the REAR seats at all times.

OM-H2406

Never install rearward facing child seat in the front passenger's seat.

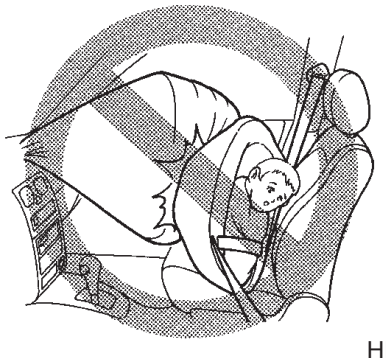

HB0306

Never allow a child to stand up, or to kneel on the front passenger's seat or any other seat

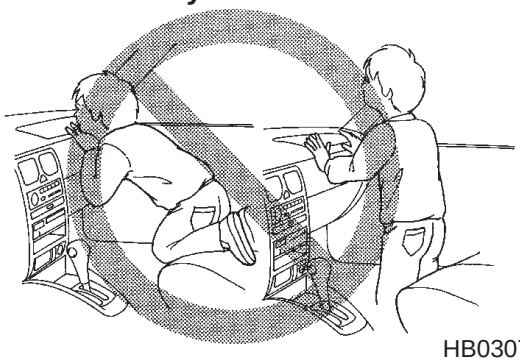

HB0307

Never hold a child on your lap or in your arms in the front passenger's seat or any other seat.

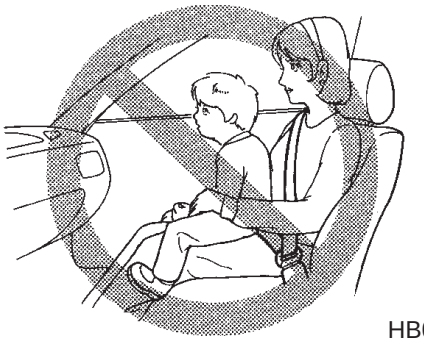

HB0308

⚠ WARNING

- **Child restraint systems and seat belts can become hot in a vehicle that has been closed up in sunny weather; they could burn a small child. Check the child restraint system before you place a child in it.**
- **Do not leave an unsecured child restraint system in your vehicle. Unsecured child restraint systems can be thrown around inside of the vehicle in a sudden stop, turn or accident; it can strike and injure vehicle occupants as well as result in serious injuries or death to the child.**

Infants and small children should always be placed in an infant or child restraint system in the rear seat while riding in the vehicle. You should use an infant or child restraint system that meets Federal Motor Vehicle

Downloaded from www.Manualslib.com manuals search engine

Safety Standard or Canada Motor Vehicle Safety Standard and is appropriate for the child's age and size. All child restraint systems are designed to be secured in vehicle seats by lap belts or the lap portion of a lap/shoulder belt.

Children could be endangered in an accident if their child restraints are not properly secured in the vehicle. When installing the child restraint system, carefully follow the manufacturer's instructions.

According to accident statistics, children are safer when properly restrained in the rear seating positions than in the front seating positions. These statistics also indicate that the safest position for a child restraint system is the center of the rear seat.

All U.S. states and Canadian provinces require that infants and small children be restrained in an approved child restraint system at all times while the vehicle is moving.

■ Installing child restraint systems in the 2-point type seat belt position (Rear center seating position)

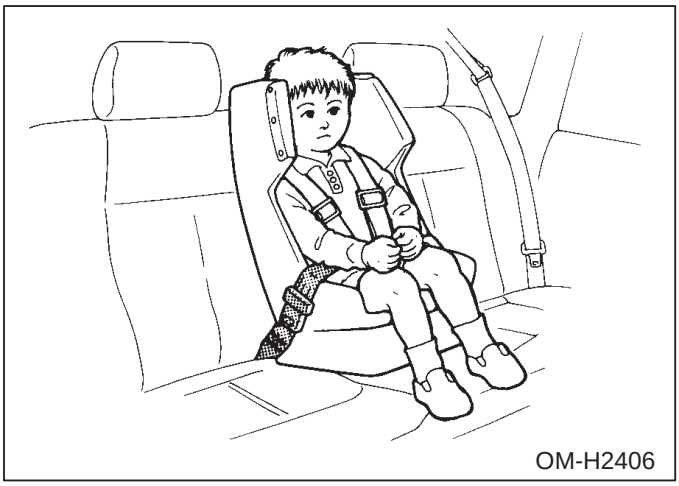

1. Set the child restraint system in the center seating position.
2. Fasten the 2-point type seat belt to the child restraint system following the instructions provided by its manufacturer.
3. Tighten the seat belt.
4. Before having a child sit in the child restraint system, move it back and forth to check if it is firmly secured. Sometimes a child restraint can

– CONTINUED –

Downloaded from www.Manualslib.com manuals search engine

be more firmly secured by pushing it down into the seat cushion and then tightening the seatbelt.

If the child restraint system requires a top strap, latch the hook onto the top strap anchor and tighten the top strap.

■ Installing child restraint systems in the 3-point type seat belt position

NOTE

When the child restraint system is no longer in use, remove it and restore the ELR function of the retractor. That function is restored by allowing the seat belt to retract fully.

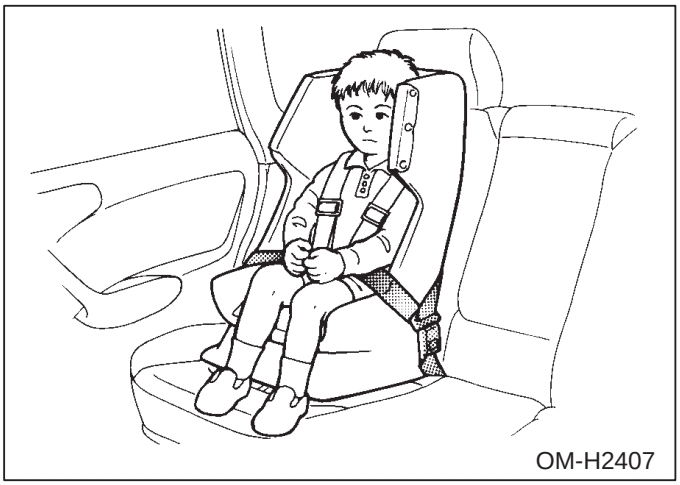

1. Set the child restraint system in the seating position.
2. Fasten the lap and shoulder belts to the child restraint system following the instructions provided by its manufacturer.
3. Take up the slack in the lap belt.
4. Put the shoulder portion of the belt between the rear seatback and the child restraint system.
5. Pull out the seat belt fully from the retractor to change the retractor over from the Emergency Locking Retractor (ELR) to the Automatic Locking Retractor (ALR) function. Then, allow the belt to rewind into the retractor. As the belt is rewinding, clicks will be heard which indicate the retractor functions as ALR.
6. Before having a child sit in the child restraint system, move it back and forth to check if it is firmly secured. Sometimes a child restraint can

Downloaded from www.Manualslib.com manuals search engine

be more firmly secured by pushing it down into the seat cushion and then tightening the seat belt.

7. Pull at the shoulder portion of the belt to confirm that it cannot be pulled out (ALR properly functioning).

If the child restraint system requires a top strap, latch the hook onto the top strap anchor and tighten the top strap.

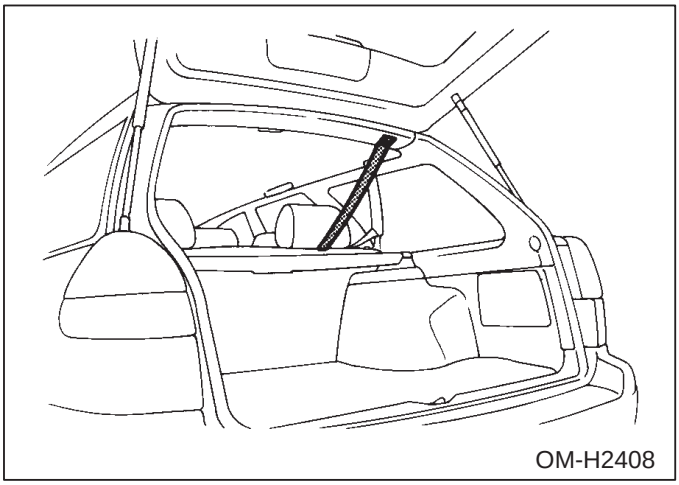

■ Top strap anchors

⚠ CAUTION

Always use a genuine top strap anchor.

▼ Installation point

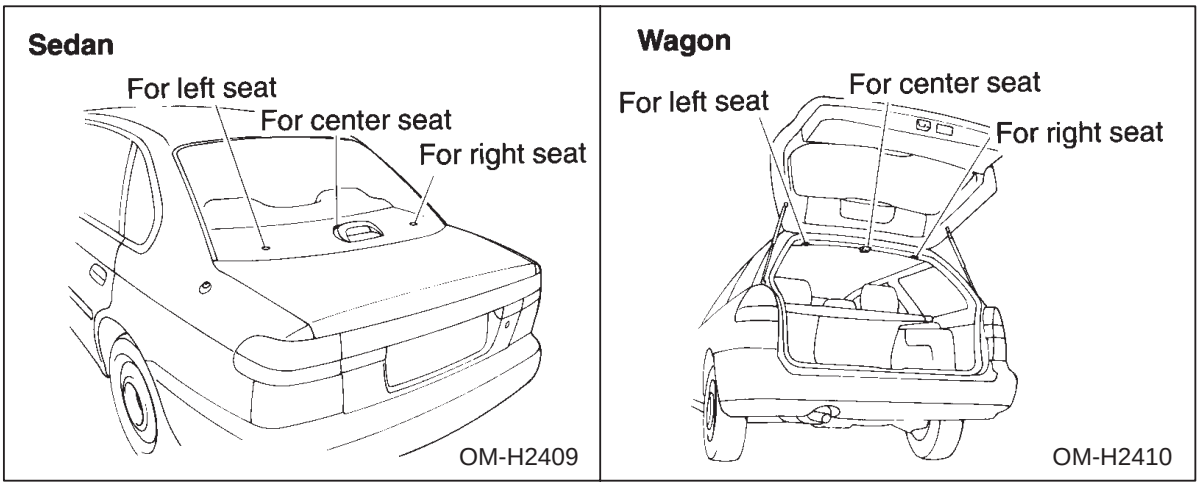

– CONTINUED –

Downloaded from www.Manualslib.com manuals search engine

- **Sedan:** Anchor installation points are located under the covers on the rear shelf.
- **Wagon:** Anchor installation points are located under the covers at the rear edge of the roof.

▼ Top strap anchor installation (for Canada models)

All vehicles built for sale in Canada include an anchor kit in the glove compartment.

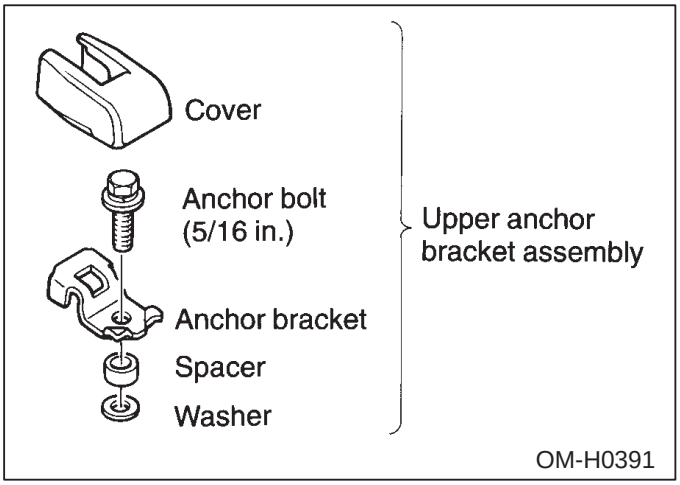

1. Take the anchor kit out and make sure that it is assembled as shown in the illustration above.

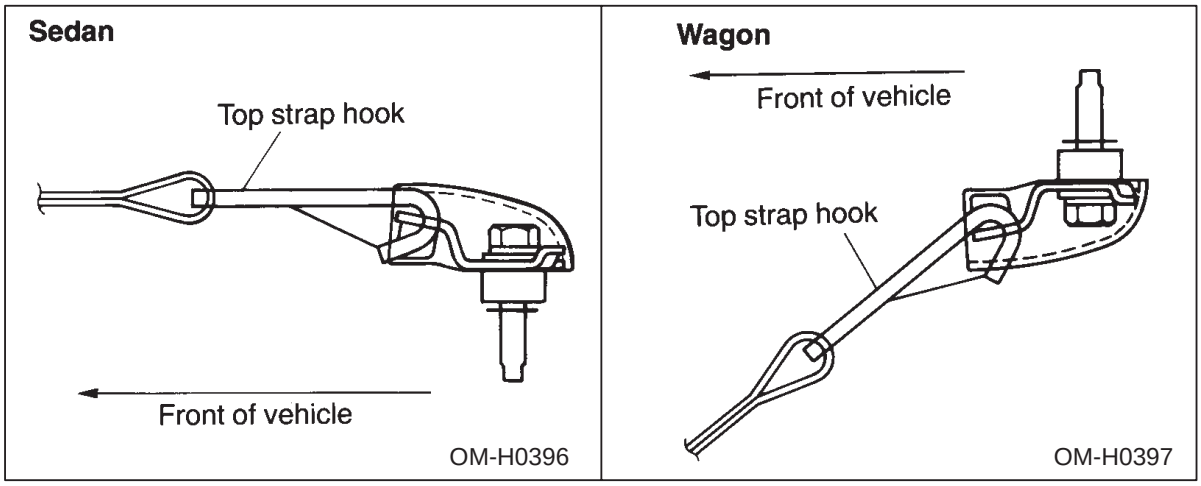

2. Remove the cover from the anchor installation point.
3. Set the anchor at the desired installation point and tighten the bolt until the anchor is firmly secured.
4. Install the anchor plate cover.

Downloaded from www.Manualslib.com manuals search engine

Please contact your SUBARU dealer about any questions you may have regarding the installation of the top strap anchor.

▼ Top strap anchor installation (for U.S. models)
Vehicles built for sale in U.S. do not include an anchor kit in the glove compartment. However, the anchor kit and installation instructions are available from your SUBARU dealer. You can also follow the installation instructions for Canada models.

*SRS AIRBAG (Supplemental Restraint System Airbag)

*SRS: This stands for supplemental restraint system. This name is used because the AIRBAG system supplements the vehicle's seat belts.

■ Vehicle with driver's and front passenger's SRS AIRBAGs and lap/shoulder restraints

⚠ WARNING

● To obtain maximum protection in the event of an accident, the driver and all passengers in the vehicle should always wear seat belts when the vehicle is moving. The SRS AIRBAG does not do away with the need to fasten seat belts. In combination with the seat belts, it offers the best combined protection in case of a serious accident.
Not wearing a seat belt increases the chance of severe injury or death in a crash even when the car has the SRS AIRBAG.
For instructions and precautions concerning the seat belt system, see the sections 3-point Type Seat Belts and 2-point Type Seat Belts in this chapter.
● Do not sit or lean unnecessarily close to the SRS AIRBAG. The SRS AIRBAG deploys with considerable speed – faster than the blink of an eye – and force to protect in high speed collisions. However, the force of an SRS AIRBAG can injure an occupant whose body is too close to SRS AIRBAG. It is also important to wear your seat belt to help avoid injuries that can result when the

– CONTINUED –

Downloaded from www.Manualslib.com manuals search engine

SRS AIRBAG contacts an occupant not in proper position such as one thrown toward the front of the car during pre-accident braking.

- **The SRS AIRBAGs deploy with considerable speed and force. Occupants who are out of proper position when the SRS AIRBAG deploys could suffer very serious injuries. Because the SRS AIRBAG needs enough space for deployment, the driver should always sit upright and well back in the seat as far from the steering wheel as practical while still maintaining full vehicle control and the front passenger should move the seat as far back as possible and sit upright and well back in the seat.**
- **Do not place any objects over the SRS AIRBAG cover or between you and the SRS AIRBAG. If the SRS AIRBAG deploys, those objects could interfere with its proper operation and could be propelled inside the car and cause injury.**

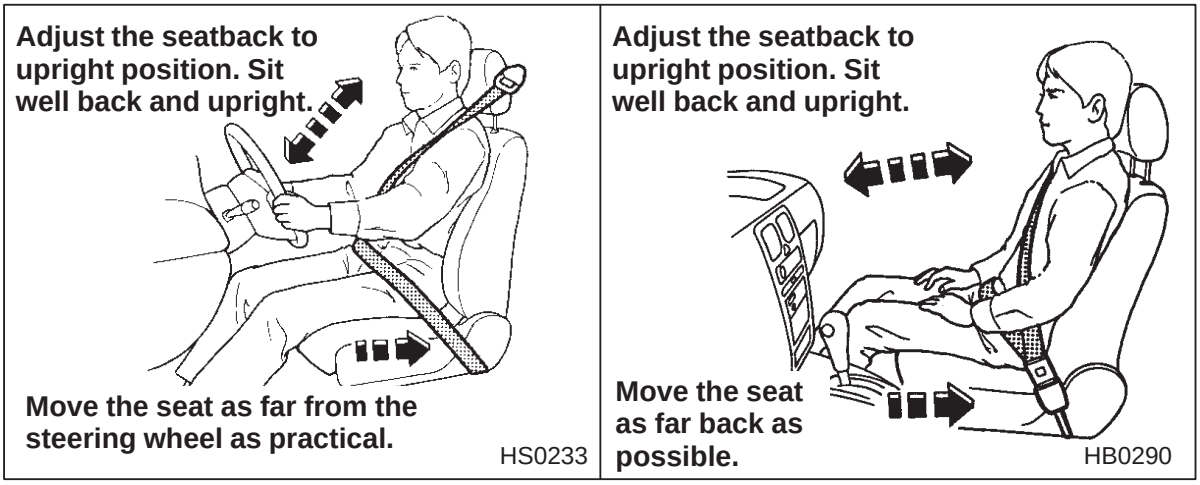

⚠ WARNING

- **Put children aged 12 and under in the rear seat properly restrained at all times. The SRS AIRBAG deploys with considerable speed and force and can injure or even kill children, especially if they are 12 years of age and under and are not restrained or improperly restrained. Because children are lighter and weaker than adults, their risk of being injured from deployment is greater.**

Downloaded from www.Manualslib.com manuals search engine

For that reason, we strongly recommend that ALL children (including those in child seats and those that have outgrown child restraint devices) sit in the REAR seat properly restrained at all times in a child restraint device or in a seat belt, whichever is appropriate for the child's age, height and weight.
Secure ALL types of child restraint devices (including forward facing child seats) in the REAR seats at all times.
According to accident statistics, children are safer when properly restrained in the rear seating positions than in the front seating positions.
For instructions and precautions concerning the child restraint system, see the Child Restraint System section in this chapter.

- **NEVER INSTALL A REARWARD FACING CHILD SEAT IN THE FRONT SEAT. DOING SO RISKS SERIOUS INJURY OR DEATH TO THE CHILD BY PLACING THE CHILD'S HEAD TOO CLOSE TO THE SRS AIRBAG.**
- **Never allow a child to stand up, or to kneel on the front passenger's seat, or never hold a child on your lap or in your arms. The SRS AIRBAG deploys with considerable force and can injure or even kill the child.**

– CONTINUED –

Downloaded from www.Manualslib.com manuals search engine

Put children in the REAR seat properly restrained at all times.

HB0291

⚠ **Never install rearward facing child seat in the front passenger's seat.**

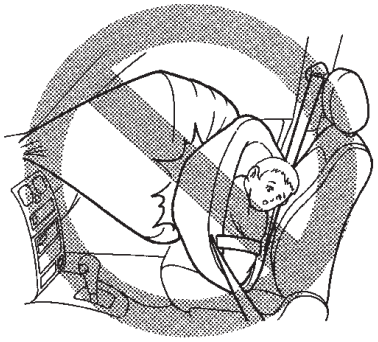

HB0306

⚠ **Never allow a child to stand up, or to kneel on the front passenger's seat.**

HB0307

⚠ **Never hold a child on your lap or in your arms.**

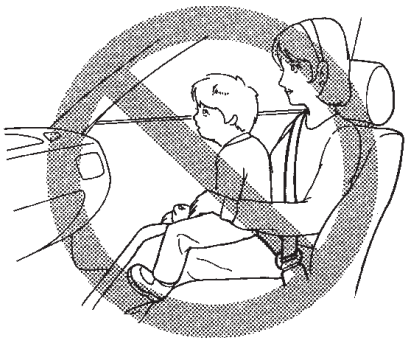

HB0308

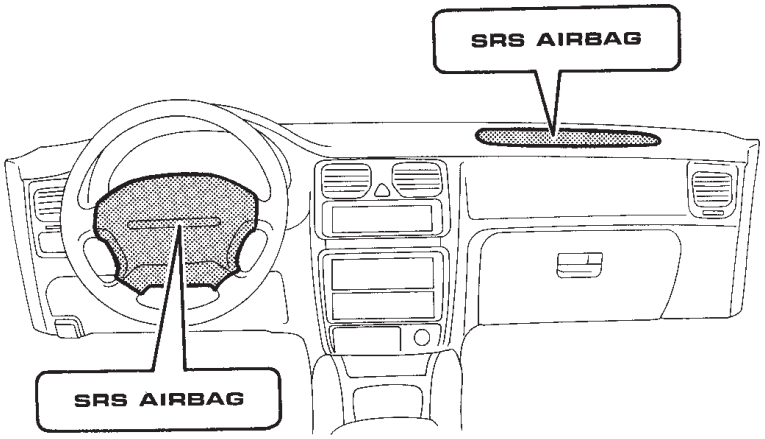

HB0236

The driver's side SRS AIRBAG is stored in the center portion of the steering wheel. The passenger's side SRS AIRBAG is stored near the top of the dashboard under the cover marked "SRS AIRBAG".

The SRS (Supplemental Restraint System) AIRBAG in your vehicle af-

Downloaded from www.Manualslib.com manuals search engine

fords the driver and front seat passenger additional protection during a moderate to severe frontal collision. This system is available for the driver and front seat passenger and is designed to supplement the protection provided by the seat belt. In a moderate to severe frontal collision, the SRS AIRBAG supplements the seat belt by reducing the impact on the driver's and front passenger's head and chest.

The SRS AIRBAG is designed to deploy in the event of an accident involving a moderate to severe frontal collision. It is basically not designed to deploy in lesser frontal impacts because the necessary protection can be achieved by the seat belt alone. Also, it is basically not designed to deploy in side or rear impacts or in roll-over accidents because SRS AIRBAG deployment would not help the occupant in those situations. The SRS AIRBAG is designed to function on a one-time-only basis. In the event that the SRS AIRBAG is deployed, replacement of the system should be performed only by an authorized SUBARU dealer. When the components of the SRS AIRBAG are replaced, use only genuine SUBARU parts.

NOTE

When you sell your vehicle, we urge you to explain to the buyer that it is equipped with SRS AIRBAGs by alerting him or her to the applicable section in this owner's manual.

■ SRS AIRBAG system operation

⚠ CAUTION

- **When the SRS AIRBAG deploys, some smoke will be released. This smoke could cause breathing problems for people with a history of asthma or other breathing trouble. If you or your passengers have breathing problems after SRS AIRBAG deploys, get fresh air promptly.**
- **Do not touch the SRS AIRBAG system components around the steering wheel and dashboard with bare hands right after deployment. Doing so can cause burns because the components can be very hot as a result of deployment.**

– CONTINUED –

Downloaded from www.Manualslib.com manuals search engine

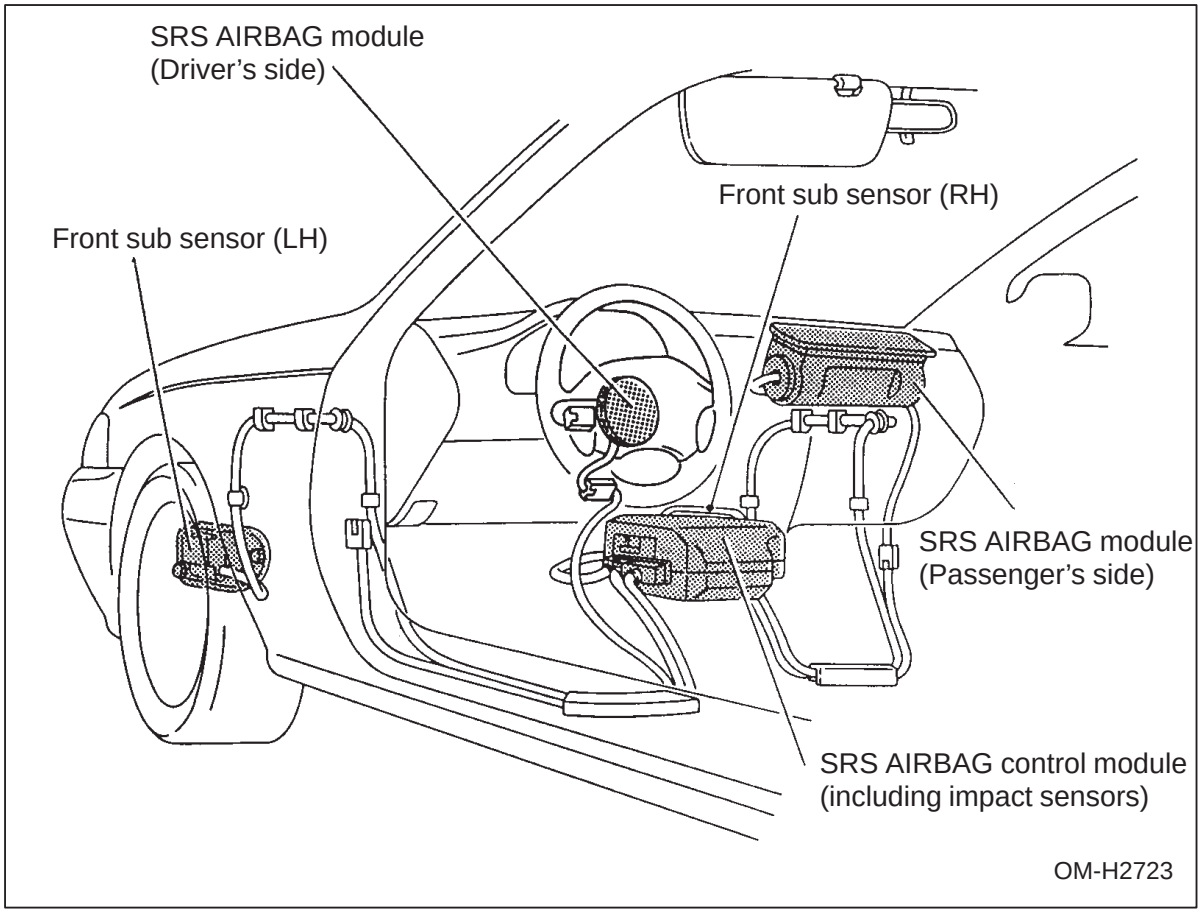

Driver's side **Passenger's side**

SRS AIRBAGs deploy as soon as a collision occurs.

After deployment, SRS AIRBAGs start to deflate immediately so that the driver's vision is not obstructed.

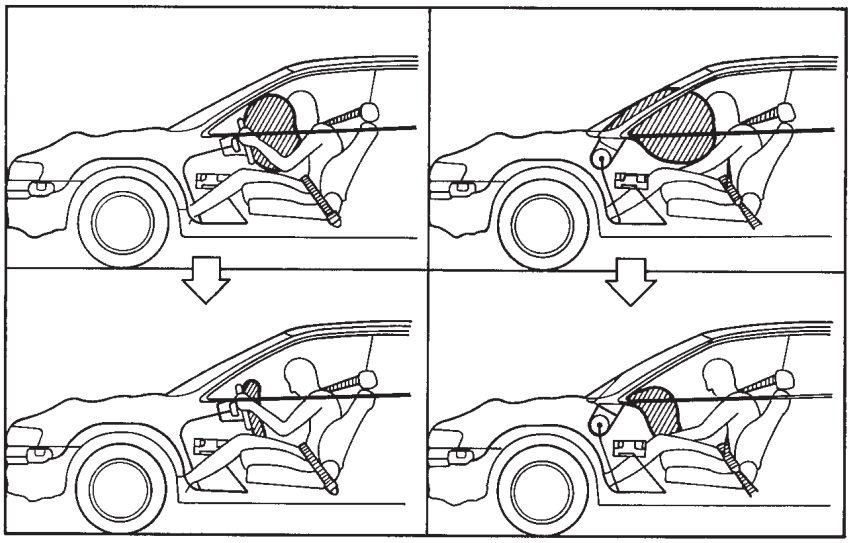

OM-H0384

Downloaded from www.Manualslib.com manuals search engine

The SRS AIRBAG can function only when the ignition switch is in the “ON” position.

If the impact sensors in the airbag control module and the front sub sensors in both front fenders detect a certain predetermined amount of force during a frontal collision, the control module sends signals to the airbag modules instructing them to inflate the SRS AIRBAGs. Then both airbag modules produce gas by chemical reaction, which instantly inflates driver’s and passenger’s SRS AIRBAGs. After the deployment, the SRS AIRBAGs immediately start to deflate so that the driver’s vision is not obstructed. The time required from detecting impact to deflating of the SRS AIRBAGs after deployment is shorter than the blink of eye.

Although it is highly unlikely that the SRS AIRBAG would activate in a non-accident situation, should it occur, the bag will deflate quickly, not obscuring vision and will not interfere with the driver’s ability to maintain control of the vehicle.

When the SRS AIRBAG deploys, a sudden, fairly loud inflation noise will be heard and some smoke will be released. These occurrences are a normal result of the chemical reaction in the airbag module. This smoke does not indicate a fire in the vehicle.

SRS AIRBAG deployment depends on the level of force experienced in the passenger compartment during a collision. That level differs from one type of collision to another, and it may have no bearing on the visible damage done to the vehicle itself.

– CONTINUED –

Downloaded from www.Manualslib.com manuals search engine

▼ Examples of the types of accidents in which the SRS AIRBAG is unlikely to deploy.

There are many types of collisions which might not necessarily require SRS AIRBAG deployment. If the vehicle strikes an object, such as a telephone pole or sign pole, or if it slides under a truck's load bed, or if it sustains an oblique offset frontal impact, the SRS AIRBAG may not deploy depending on the level of accident forces involved.

The vehicle strikes a telephone pole or similar object. 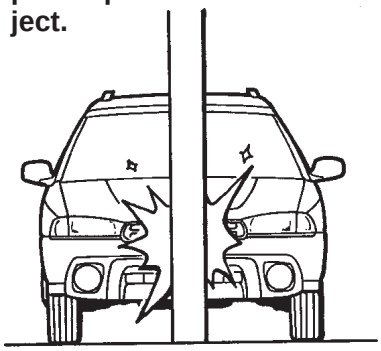 HB0309	**The vehicle slides under a truck's load bed.** 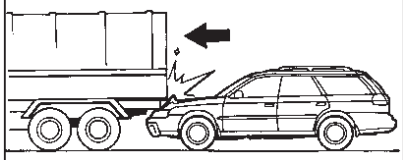 HB0310	**The vehicle sustains an oblique offset frontal impact.** 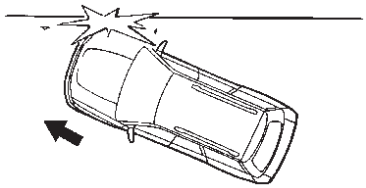 HB0311

▼ Examples of the types of accidents in which the SRS AIRBAG will basically not deploy.

The SRS AIRBAG is basically not designed to deploy if the vehicle is stuck from side or from behind, or if it rolls onto its side or roof, or if it is involved in a low-speed frontal collision.

The vehicle is struck from behind. 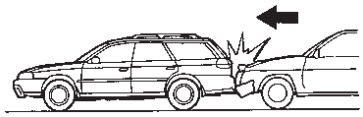 HB0312	**The vehicle is struck from the side.** 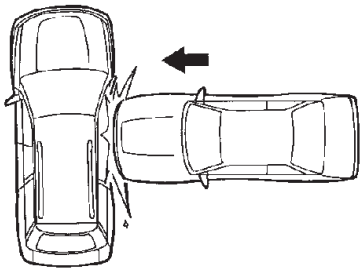 HB0313	**The vehicle rolls onto its side or roof.** 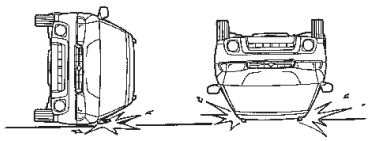 HB0314

Downloaded from www.Manualslib.com manuals search engine

System monitors

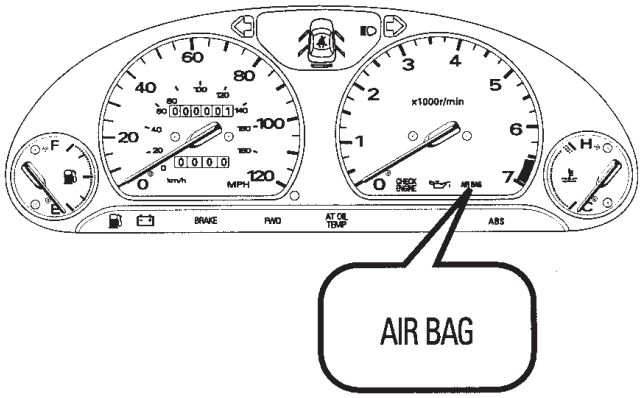

A diagnostic system continually monitors the readiness of the SRS AIRBAG while the vehicle is being driven. The SRS AIRBAG warning light will show normal system operation by lighting for about 6 seconds when the ignition key is first turned to the “ON” position and then turning off.

The following components are monitored by the indicator:

- Right front sub sensor
- Left front sub sensor
- AIRBAG control module (including impact sensors)
- AIRBAG module (driver’s side)
- AIRBAG module (passenger’s side)
- All related wiring

In the event of a malfunction indicated by any of following, the vehicle should be taken promptly to your nearest SUBARU dealer to have the system checked. Unless checked and repaired, the SRS AIRBAG will not function reliably:

- Flashing or flickering of the warning light.
- Failure of the warning light to illuminate when the ignition switch is first turned to the “ON” position.
- Continuous illumination of the warning light.
- Illumination of the warning light while driving.

– CONTINUED –

Downloaded from www.Manualslib.com manuals search engine

■ System servicing

⚠ WARNING

- **When discarding an airbag module or scrapping the entire car damaged by a collision, consult your SUBARU dealer.**
- **The SRS AIRBAG has no user-serviceable parts. Tampering with or disconnecting the system's wiring could result in accidental inflation of the airbag or could make the system inoperative, which may result in serious injury. The wiring harnesses of the SRS AIRBAG system are covered with yellow insulation and the connectors of the system are yellow for easy identification. Do not use electrical test equipment on any circuit related to the SRS AIRBAG system. For required servicing of the SRS AIRBAG, see your nearest SUBARU dealer.**

⚠ CAUTION

The front sub sensors are located in both front fenders and the SRS AIRBAG control module including the impact sensors is located under the center console. If you need service or repair in those areas or near the steering wheel and column, we recommend that you have an authorized SUBARU dealer perform the work.

To ensure its long-term reliability, the SRS AIRBAG must be inspected by a SUBARU dealer ten years after the date of manufacture, which is shown on the certification label attached to the driver's door.

NOTE

- If the front part of the vehicle was involved in an accident not of the extent to cause the SRS AIRBAGs to deploy, contact your SUBARU dealer as soon as possible.
- If the pad section of the steering wheel or front passenger's SRS AIRBAG cover is scratched, cracked, or otherwise damaged, contact your SUBARU dealer as soon as possible.

Downloaded from www.Manualslib.com manuals search engine

■ Precautions against vehicle modification

⚠ WARNING

- **Do not put any objects over the steering wheel pad and dashboard. If the SRS AIRBAG deploys, those objects could interfere with its proper operation and could be propelled inside the vehicle and cause injury.**
- **Do not attach accessories to the windshield, or fit an extra-wide mirror over the rear view mirror. If the SRS AIRBAG deploys, those objects could become projectiles that could seriously injure vehicle occupants.**
- **To avoid accidental actuation of the system or rendering the system inoperative, which may result in serious injury, no modifications should be made to any components or wiring of the SRS AIRBAG.**

This includes the installation of "custom" steering wheels or additional trim material, or badges over the pad section of the steering wheel. Installation of additional electrical/electronic equipment such as a mobile two way radio on or near SRS AIRBAG components and/or wiring is not advisable.

⚠ Do not put any objects over the steering wheel pad and dashboard

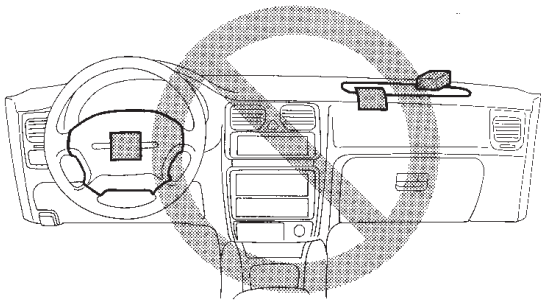

HB0239

⚠ Do not attach accessories to the windshield, or fit an extra-wide mirror over the rear view mirror.

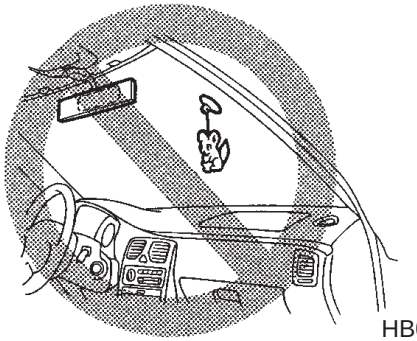

HB0315

– CONTINUED –

Downloaded from www.Manualslib.com manuals search engine

⚠ CAUTION

Do not perform any of the following modifications. Such modifications can interfere with proper operation of the SRS AIRBAG system.

- **Attachment of any equipment (brush bar, winches, snow plow, skid plate, etc.) other than SUBARU genuine accessory parts to the front end.**
- **Modification of the suspension system and front end structure.**
- **Installation of a tire of different size and construction from the original tire listed on the tire placard attached to the door jamb.**

Always consult your SUBARU dealer if you want to install any accessory parts to your vehicle.

Downloaded from www.Manualslib.com manuals search engine

Instruments and controls

Instrument panel overview 3-2
Combination meter overview 3-4
Gauges 3-5
- Speedometer 3-5
- Odometer 3-5
- Trip meter 3-5
- Tachometer (if equipped) 3-5
- Fuel gauge 3-6
- Temperature gauge 3-6

Warning and indicator lights 3-7
- Checking bulbs 3-7
- Seat belt warning light and chime 3-7
- SRS AIRBAG warning light 3-7
- Charge warning light 3-8
- Oil pressure warning light 3-8
- Brake system warning light 3-8
- CHECK ENGINE warning light/Malfunction indicator lamp 3-9
- ABS warning light (for vehicles with ABS) 3-10
- AT OIL TEMPerature warning light (for AT vehicles) 3-11
- Door open warning lights 3-12
- Front-wheel drive warning light (for AWD AT vehicles) 3-12
- Low fuel warning light 3-12
- Turn signal indicator lights 3-12
- High beam indicator 3-12

Hazard warning flasher 3-13
Light controls 3-13
- Light switch 3-13
- Illumination brightness control 3-16
- Parking light switch 3-16
- Fog light switch (if equipped) 3-17

Wiper controls 3-17
- Windshield wipers and washer switch 3-20
- Rear window wiper and washer switch (Wagon — if equipped) 3-21
- Wiper deicer (if equipped) 3-22

Rear window defogger switch 3-23
Horn 3-24
Mirrors 3-25
- Inside mirror 3-25
- Outside mirrors 3-25

Downloaded from www.Manualslib.com manuals search engine

Instrument panel overview

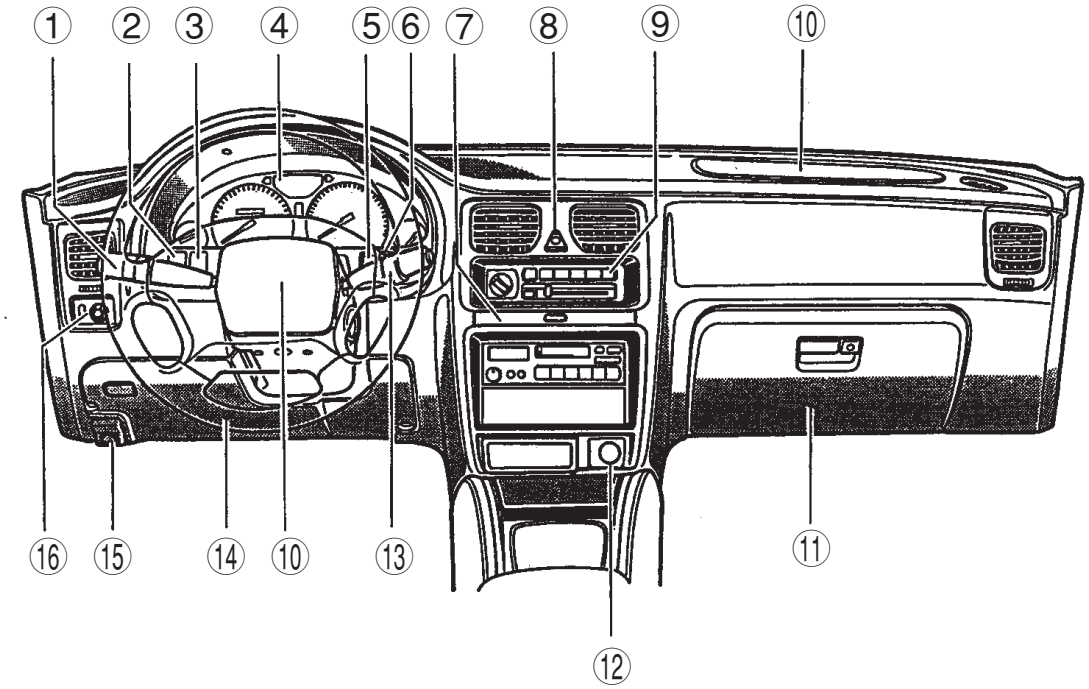

HB0299

① Lighting, turn signal and illumination brightness control switch (page 3-13)
② Security system indicator light (Page 1-17)
③ Fog light switch (page 3-17)
④ Combination meter (page 3-4)
⑤ Rear window defogger switch (page 3-23)
⑥ Cruise control main switch (page 7-24)
⑦ Cup holder (page 6-5)
⑧ Hazard warning flasher (page 3-13)
⑨ Heater or air conditioner control (page 4-3)
⑩ SRS AIRBAG (page 2-31)
⑪ Glove compartment (page 6-4)
⑫ Cigarette lighter socket (page 6-7)
⑬ Windshield wiper and washer switch (page 3-20)
⑭ Steering (page 7-23)
⑮ Hood lock release (page 1-35)
⑯ Remote control mirror switch (page 3-26)

Downloaded from www.Manualslib.com manuals search engine

Instrument panel overview (Right hand drive vehicles)

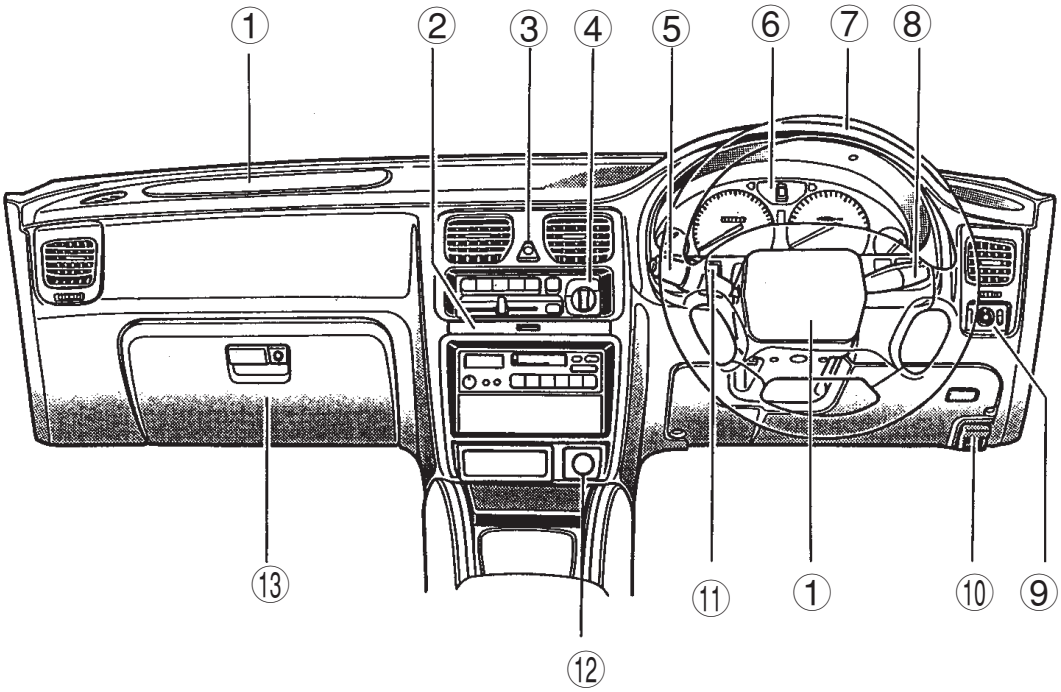

HB0300

① SRS AIRBAG (page 2-31)
② Cup holder (page 6-5)
③ Hazard warning flasher (page 3-13)
④ Heater or air conditioner control (page 4-14)
⑤ Lighting, turn signal and illumination brightness control switch (page 3-13)
⑥ Combination meter (page 3-4)
⑦ Steering (page 7-23)
⑧ Windshield wiper and washer switch (page 3-20)
⑨ Remote control mirror switch (page 3-26)
⑩ Hood lock release (page 1-35)
⑪ Rear window defogger switch (page 3-23)
⑫ Cigarette lighter socket (page 6-7)
⑬ Glove compartment (page 6-4)

Downloaded from www.Manualslib.com manuals search engine

Combination meter overview

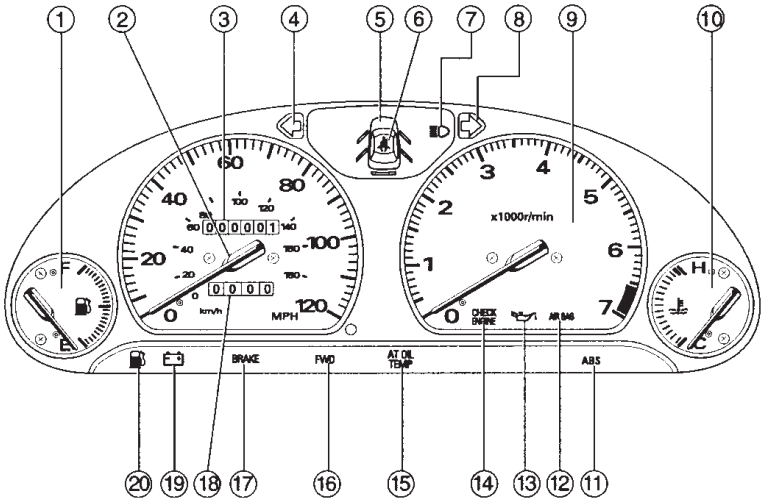

HB0246

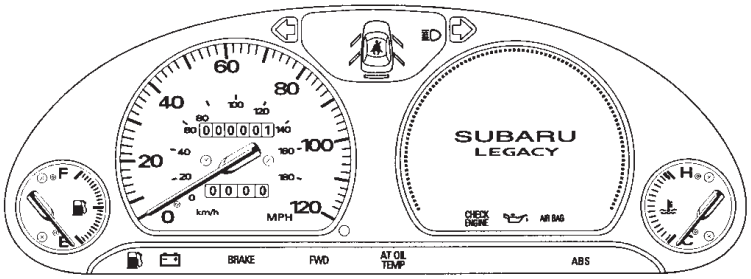

HB0247

① Fuel gauge (page 3-6)
② Speedometer (page 3-5)
③ Odometer (page 3-5)
④ Turn signal indicator light (page 3-12)
⑤ Door open warning light (page 3-12)
⑥ Seatbelt warning light (page 3-7)
⑦ High beam indicator light (page 3-12)
⑧ Turn signal indicator light (page 3-12)
⑨ Tachometer (page 3-5)
⑩ Temperature gauge (page 3-6)
⑪ ABS warning light (page 3-10)
⑫ SRS AIRBAG warning light (page 3-7)
⑬ Oil pressure warning light (page 3-8)
⑭ CHECK ENGINE warning light/ Malfunction indicator lamp (page 3-9)
⑮ AT oil temperature warning light (page 3-11)
⑯ Front-wheel drive warning light (page 3-12)
⑰ Brake system warning light (page 3-8)
⑱ Trip meter (page 3-5)
⑲ Charge warning light (page 3-8)
⑳ Low fuel warning light (page 3-12)

Downloaded from www.Manualslib.com manuals search engine

Gauges

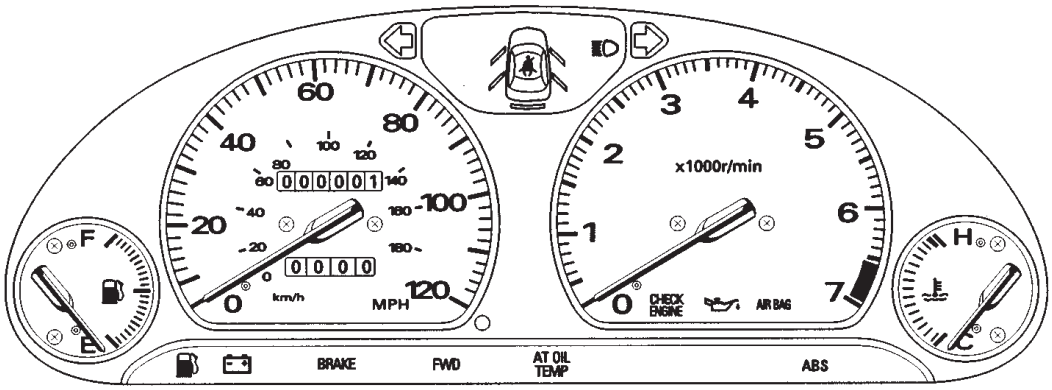

HB0248

■ Speedometer

The speedometer shows the vehicle speed.

■ Odometer

The odometer shows the total distance that the vehicle has been driven.

■ Trip meter

The trip meter shows the distance that the vehicle has been driven since you last set it to zero.
To set the trip meter to zero, press the knob.

■ Tachometer (if equipped)

⚠ CAUTION

Do not operate the engine with the pointer of the tachometer in the red zone. In this range, fuel injection will be cut by the engine control module to protect the engine from overrevving. The engine will resume running normally after the engine speed is reduced below the red zone.

The tachometer shows the engine speed in thousands of revolutions per minute.

– CONTINUED –

Downloaded from www.Manualslib.com manuals search engine

■ Fuel gauge

The fuel gauge shows approximately the amount of the fuel remaining in the tank.
The gauge does not return to “E” even though the ignition switch is in the “ACC” or “LOCK” position.

The gauge may move slightly during braking, turning or acceleration due to fuel movement in the tank.

■ Temperature gauge

⚠ CAUTION

If the pointer exceeds the normal operating range, safely stop the vehicle as soon as possible.
See “In case of emergency” in this manual.

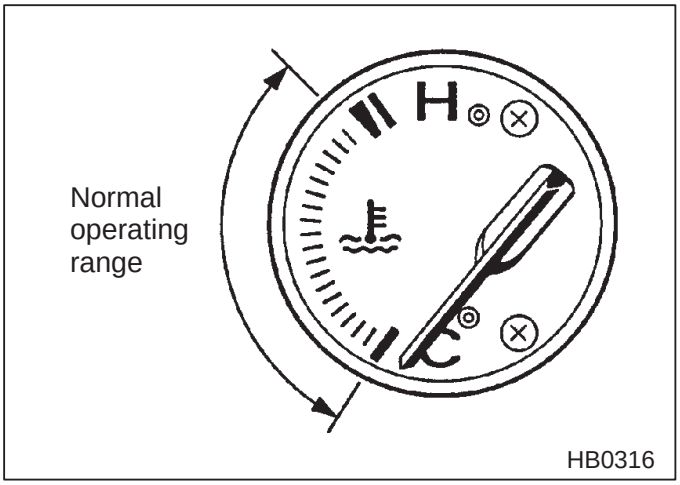

The temperature gauge shows engine coolant temperature when the ignition switch is in the “ON” position.

The coolant temperature will vary in accordance with the outside temperature and driving conditions.

We recommend that you drive moderately until the pointer of the temperature gauge reaches near the middle of the range. Engine operation is optimum with the engine coolant at this temperature range and high revving operation when the engine is not warmed up enough should be avoided.

Downloaded from www.Manualslib.com manuals search engine

Warning and indicator lights

■ Checking bulbs

Several of the warning and indicator lights come on momentarily and then go out when the ignition switch is initially turned to the “ON” position. This permits checking the operation of the bulbs.
Apply the parking brake and turn the ignition switch to the “ON” position. The following lights come on:

Seat belt warning light
SRS AIRBAG warning light
Charge warning light
Oil pressure warning light
Brake system warning light
CHECK ENGINE warning light/Malfunction indicator lamp
ABS warning light (if equipped)
AT OIL TEMP warning light (automatic transmission vehicles)

If any lights fail to come on, it indicates a burned-out bulb or a malfunction of the corresponding system.
Consult your authorized SUBARU dealer for repair.

■ Seat belt warning light and chime

When the ignition switch is turned to the “ON” position, the seat belt warning light will come on and the reminder chime will sound to remind driver to fasten the seat belt.
The seat belt warning light will remain on for about six seconds and turn off automatically after six seconds.
The seat belt reminder chime will turn off by buckling the driver’s side seat belt or turn off automatically after about six seconds.

■ SRS AIRBAG warning light

AIRBAG

When the ignition switch is turned to the “ON” position, the SRS AIRBAG warning light will come on for about six seconds and go out. This shows the SRS AIRBAG is in normal operation.
If this light comes on while driving or does not go out after the engine starts, it may indicate that the SRS AIRBAG system is not working properly. Contact your nearest SUBARU dealer immediately.

– CONTINUED –

Downloaded from www.Manualslib.com manuals search engine

■ Charge warning light

If this light comes on when the engine is running, it may indicate that the charging system is not working properly.

If the light comes on while driving or does not go out after the engine starts, stop the engine at the first safe opportunity and check the alternator belt. If the belt is loose, broken or if the belt is in good condition but the light remains on, contact your nearest SUBARU dealer immediately.

■ Oil pressure warning light

⚠ CAUTION

Do not operate the engine with the oil pressure warning light on. This may cause engine damage.

If this light comes on when the engine is running, it may indicate that the engine oil pressure is low and the lubricating system is not working properly.

If the light comes on while driving or does not go out after the engine starts, stop the engine at the first safe opportunity and check the engine oil level. If the oil level is low, add oil immediately. If the engine oil is at the proper level but the light remains on, contact your nearest SUBARU dealer immediately.

■ Brake system warning light

BRAKE (U.S.)
(Canada)

⚠ WARNING

- **Driving with the brake system warning light on is dangerous. This indicates your brake system may not be working properly. If the light remains on, have the brakes inspected by a SUBARU dealer immediately.**
- **If at all in doubt about whether the brakes are operating properly, do not drive the vehicle. Have your vehicle towed to the nearest SUBARU dealer for repair.**

Downloaded from www.Manualslib.com manuals search engine

This light has the following two functions:

▼ **Parking brake warning**
The light comes on with the parking brake applied while the ignition switch is in the “ON” position. It goes out when the parking brake is fully released.

▼ **Brake fluid level warning**
This light comes on when the brake fluid level has dropped to near the “MIN” level of the brake fluid reservoir with the ignition switch in the “ON” position and with the parking brake fully released.

If the brake system warning light should come on while driving (with the parking brake fully released and with the ignition switch positioned in “ON”), it could be an indication of leaking of brake fluid or worn brake pads. Have your vehicle checked by a SUBARU dealer immediately.

■ CHECK ENGINE warning light/Malfunction indicator lamp CHECK ENGINE

⚠ CAUTION
If the CHECK ENGINE light comes on while you are driving, have your vehicle checked/repaired by your SUBARU dealer as soon as possible. Continued vehicle operation without having the emission control system checked and repaired as necessary could cause serious damage, which may not be covered by your vehicle’s warranty.

If this light comes on steadily or blinks while the engine is running, it may indicate that there is a problem or potential problem somewhere in the emission control system.

▼ **If the light comes on steadily:**
If the light comes on steadily while driving or does not go out after the engine starts, an emission control system malfunction has been detected.
You should have your vehicle checked by an authorized SUBARU dealer immediately.

– CONTINUED –

Downloaded from www.Manualslib.com manuals search engine

NOTE

This light also comes on when the fuel filler cap is not tightened until it clicks.

If you have recently refueled your vehicle, the cause of the CHECK ENGINE warning light/malfunction indicator lamp coming on could be a loose or missing fuel filler cap. Remove the cap and retighten it until it clicks. Make sure nothing is interfering with the sealing of the cap. Tightening the cap will not make the CHECK ENGINE warning light turn off immediately. It may take several driving trips. If the light does not go out, take your vehicle to your authorized SUBARU dealer immediately.

▼ If the light is blinking:

If the light is blinking while driving, an engine misfire condition has been detected which may damage the emission control system.

To prevent serious damage to the emission control system, you should do the following:

- Reduce vehicle speed.
- Avoid hard acceleration.
- Avoid steep uphill grades.
- Reduce the amount of cargo, if possible.
- Stop towing a trailer as soon as possible.

The CHECK ENGINE warning light may stop blinking and come on steadily after several driving trips. You should have your vehicle checked by an authorized SUBARU dealer immediately.

■ ABS warning light (for vehicles with ABS)

ABS (U.S.)
(ABS) (Canada)

The ABS warning light comes on when the ignition switch is turned to the "ON" position and goes out after about two seconds.

This is an indication that the ABS system is working properly.

If the warning light behaves as follows, ABS system may not work properly.

- The warning light does not come on when the ignition switch is turned to the "ON" position.

Downloaded from www.Manualslib.com manuals search engine

- The warning light comes on when the ignition switch is turned to the "ON" position, but it does not go out even when the vehicle speed exceeds approximately 8 mph (12 km/h).
- The warning light comes on during driving.

When the warning light is on, the ABS function shuts down; however, the conventional brake system continues to operate normally. If this occurs, have the ABS system repaired at the first available opportunity by your SUBARU dealer.

NOTE

If the warning light behavior is as shown below, the ABS system may be considered normal.

- The warning light comes on right after the engine is started but goes out immediately, remaining off.
- The warning light remains on after the engine has been started, but it goes out when the vehicle speed reaches about 8 mph (12 km/h).
- The warning light comes on during driving, but it goes out immediately and remains off.

When driving with an insufficient battery voltage such as when the engine is jump started, the ABS warning light may come on. This is due to the low battery voltage and does not indicate a malfunction. When the battery becomes fully charged, the light will go out.

■ AT OIL TEMPerature warning light (for AT vehicles)

AT OIL TEMP

If this light comes on when the engine is running, it may indicate that the automatic transmission fluid temperature is too hot.

If the light comes on while driving, it is unnecessary to stop the vehicle, but avoid driving up steep grades or in stop and go traffic.

▼ Automatic transmission control system warning

If the light flashes after the engine starts, it may indicate that the automatic transmission control system is not working properly. Contact your nearest SUBARU dealer for service immediately.

– CONTINUED –

Downloaded from www.Manualslib.com manuals search engine

■ Door open warning lights

The specific door open warning light comes on if any door or rear gate is not fully closed.
Always make sure this light is out before you start to drive.

■ Front-wheel drive warning light (for AWD AT vehicles)

FWD

This light comes on when All Wheel Drive is disengaged and the drive mechanism is switched to Front Wheel Drive for maintenance or similar purposes.

■ Low fuel warning light

The low fuel warning light comes on when the tank is nearly empty (about 2.3 U.S. gal., 9.0 liters, or 1.9 Imp. gal.). It only operates when the ignition switch is in the “ON” position.

■ Turn signal indicator lights

These lights show the operation of the turn signal or lane change signal.
If the indicator lights do not blink or blink rapidly, the turn signal bulb may be burned out. Replace the bulb as soon as possible. Refer to Replacing Bulbs section in Chapter 10.

■ High beam indicator

This light shows that the headlights are in the high beam mode.
This indicator light also comes on when operating headlight flasher.

Downloaded from www.Manualslib.com manuals search engine

Hazard warning flasher

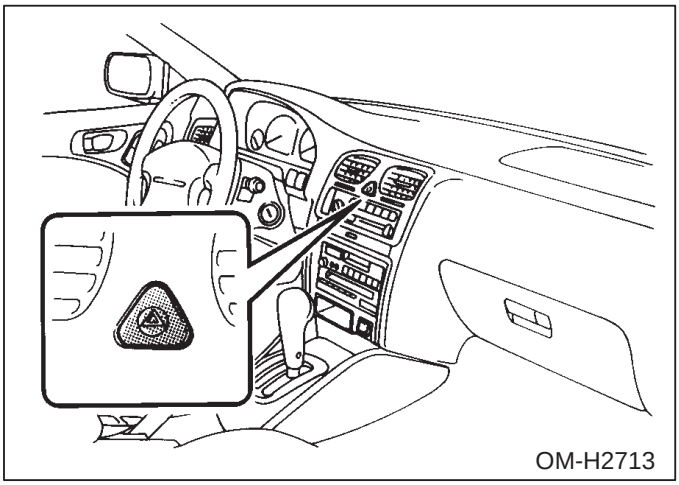

The hazard warning flasher is used to warn other drivers when you have to park your vehicle under emergency conditions. The hazard warning flasher works with the ignition switch in any position.
When you have to park your vehicle under emergency conditions, pull off the roads safely and park away from the traffic if it is possible.

To turn on the hazard warning flasher, push the hazard warning button on the instrument panel. To turn off the flasher, push the button again.

NOTE
When the hazard warning flasher is on, the turn signals do not work.

Light controls

■ Light switch

⚠ WARNING
To prevent battery discharge resulting from accidentally leaving your lights on when your vehicle is parked, the light switch operates only when the ignition switch is in the “ON” position. In any other position, the vehicle’s lights will be out. If you park your vehicle on a roadside at night, use hazard warning flasher to alert the other drivers.

– CONTINUED –

Downloaded from www.Manualslib.com manuals search engine

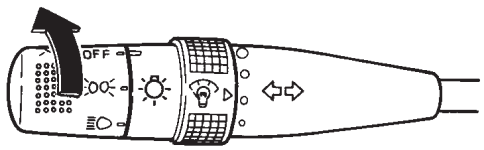

OM-H0359

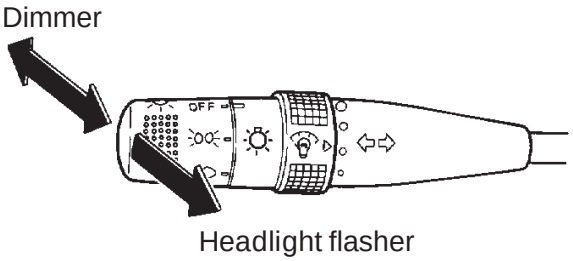

OM-H0360

The light switch operates only when the ignition switch is in the “ON” position.

▼ Headlights

To turn on the headlights, turn the knob on the end of the turn signal lever.

first position

Position lights, instrument panel illumination, tail lights and license plate light are on.

second position

Headlights, position lights, instrument panel illumination, tail lights, and license plate light are on.

▼ High/low beam change (dimmer)

To change from low beam to high beam, push the turn signal lever forward. When the headlights are on high beam, the high beam indicator light “” on the instrument panel is also on.

To switch back to low beam, pull the lever back to the detent position.

▼ Headlight flasher

⚠ CAUTION

Do not hold the lever in the flashing position for more than just a few seconds.

To flash the headlights, pull the lever toward you and then release it. The

Downloaded from www.Manualslib.com manuals search engine

high beam will stay on for as long as you hold the lever. The headlight flasher works even though the lighting switch is in the “OFF” position.

When the headlights are on high beam, the high beam indicator light “≣D” on the instrment panel also comes on.

▼ Daytime running light system (for CANADA models)

⚠ WARNING

The tail lights, parking lights, and side marker lights are not turned on by the daytime running light system. The light switch must always be turned to the “≣D” position when it is dark outside.

The low beam headlights will automatically come on at reduced brightness when the engine has started, under the following conditions:

- The parking brake is fully released.
- The automatic transmission selector lever is set at other than the “P” position.
- The light switch is in the “OFF” position.

▼ Turn signals

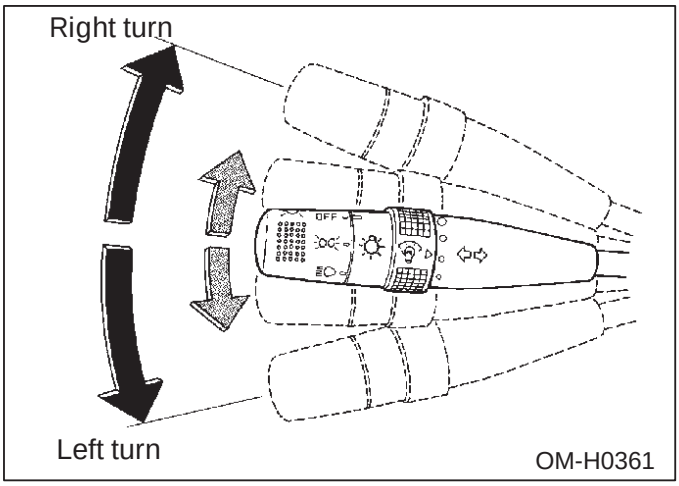

To activate the right turn signal, push the turn signal lever up. To activate the left turn signal, push the turn signal lever down. When the turn is finished, the lever will return automatically. If the lever will not return after cornering, return the lever to the neutral position by hand.

– CONTINUED –

Downloaded from www.Manualslib.com manuals search engine

To signal a lane change, push the turn signal lever up or down slightly and hold it during lane change. The turn signal indicator lights will flash in the direction of the turn or lane change. The lever will return automatically to the neutral position when you release it.

■ Illumination brightness control

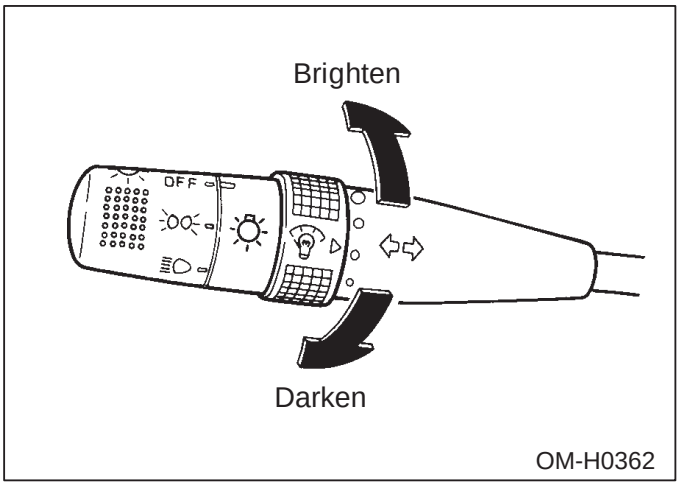

When the lighting switch is in the "" or "" position, you can adjust brightness of the instrument panel illumination for better visibility.
To brighten, turn the control dial counterclockwise.
To darken, turn the control dial clockwise.

■ Parking light switch

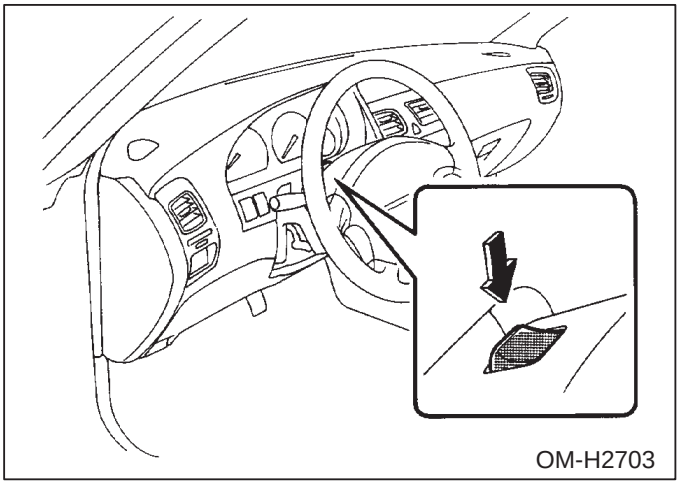

The parking light switch operates regardless of the ignition switch position.

Downloaded from www.Manualslib.com manuals search engine

By pushing the rear end of this switch, following lights will come on.
- Parking lights
- Front and rear side marker lights
- Tail lights
- License plate lights

To turn off, push the front end of the parking light switch.
Avoid leaving these lights on for a long time because that will run down the battery.

■ Fog light switch (if equipped)

The fog lights operate only when the headlights are on low beam.
Push the fog light switch to turn the fog lights on.
Press the switch again to turn them off.

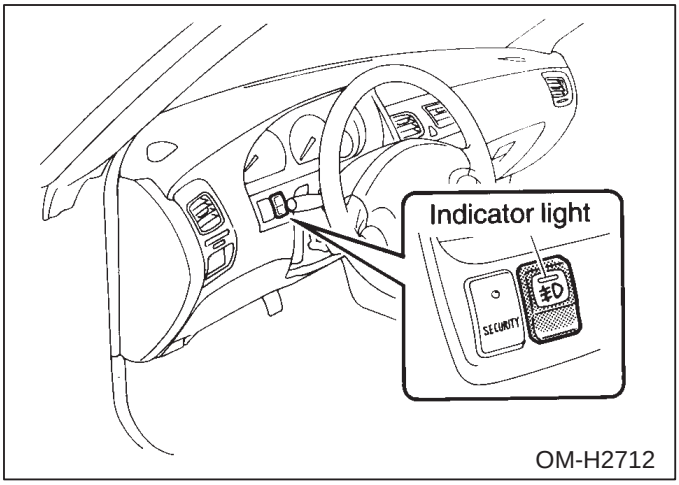

The indicator light located on the switch will illuminate when the fog lights are on.

Wiper controls

⚠ WARNING

In freezing weather, do not use the windshield washer until the windshield is sufficiently warmed by the defroster.
Otherwise the washer fluid can freeze on the windshield, blocking your view.

– CONTINUED –

Downloaded from www.Manualslib.com manuals search engine

⚠ CAUTION

- **Do not operate the washer continuously for more than ten seconds, or when the washer fluid tank is empty. This may cause overheating of the washer motor. Check the washer fluid level frequently, such as at fuel stops.**
- **Do not operate the wipers when the windshield or rear window is dry. This may scratch the glass, damage the wiper blades and cause the wiper motor to burn out. Before operating the wiper on a dry windshield or rear window, always use the windshield washer.**
- **In freezing weather, be sure the wiper blades are not frozen to the windshield or rear window before operating the wipers.**
- **Do not operate the wipers if the wiper blades are frozen to the windshield or rear window. If the wiper would be operated with the wiper blades frozen to the windshield or rear window, the wiper blades could be worn or damaged prematurely, resulting in streaking or incomplete wiping. Be sure to use the defroster or wiper deicer (if equipped) or rear window defogger, if the wiper blades are frozen to the glass.**
- **Do not clean the wiper blades with gasoline or a solvent, such as paint thinner or benzene. This will cause deterioration of the wiper blades.**

NOTE

- The wiper operates only when the ignition switch is in the “ON” or “ACC” position.

- Clean your wiper blades and windshield periodically with a windshield washer solution to prevent streaking, and to remove accumulations of road salt or road film. Keep the windshield washer button depressed at least for 1 second so that washer solution will be sprinkled all over the windshield or rear window.

- Grease, wax, insects or other material on the windshield or the wiper blade results in jerky wiper operation and streaking on the glass. If you cannot remove those streaks after operating the windshield washer or if

Downloaded from www.Manualslib.com manuals search engine

the wiper operation is jerky, clean the outer surface of the windshield (or rear window) and the wiper blades using a sponge or soft cloth with a neutral detergent or mild-abrasive cleaner. After cleaning, rinse the windshield and wiper blades with clean water. The windshield is clean if beads do not form when you rinse the windshield with water.

- If you cannot eliminate the streaking even after following this method, replace the wiper blades with new ones. Refer to the Wiper Blade Replacement section (chapter 10) for replacement instructions.

■ Windshield wipers and washer switch

▼ Windshield wipers

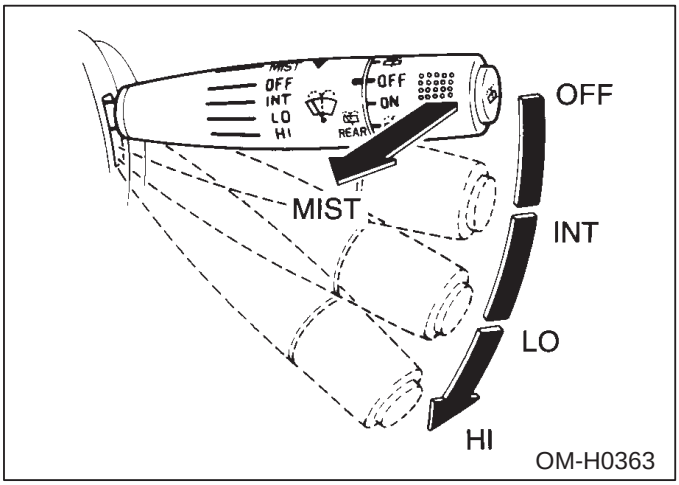

To turn the wipers on, push the wiper control lever down.

INT: Intermittent
LO : Low speed
HI : High speed

To turn the wipers off, return the lever to the “OFF” position.

– CONTINUED –

Downloaded from www.Manualslib.com manuals search engine

▼ Wiper intermittent time control (if equipped)

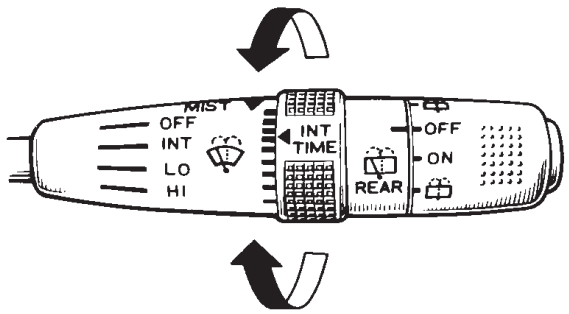

OM-H2419

When the wiper switch is in the “INT” position, turn the dial to adjust the operating interval of the wiper.

▼ Mist (for a single wipe)

For a single wipe of the wipers, pull the lever toward you. The wipers operate until you release the lever.

▼ Washer

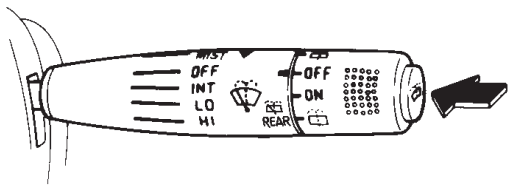

OM-H0364

To wash the windshield, push the washer button at the end of the wiper control lever. The washer fluid sprays until you release the washer button. The wipers operate while you push the button.

Downloaded from www.Manualslib.com manuals search engine

■ Rear window wiper and washer switch (Wagon — if equipped)

⚠ CAUTION

- **In freezing weather, be sure the wiper blade is not frozen to the rear window before operating the rear wiper. Attempting to operate the wiper while the blade is frozen to the rear window could cause the wiper motor to burn out. If the wiper blade is frozen to the rear window, turn on the rear window defogger and wait to melt the frozen wiper blade from the rear window before operating the rear wiper.**
- **If the wiper stops during operation because of ice or some other obstruction on the rear window, the wiper motor could burn out even if the wiper switch is turned off. If this occurs, promptly stop the vehicle in a safe place, turn the ignition switch to the "LOCK" position and clean the rear window to allow proper wiper operation.**
- **To prevent the washer motor from overheating, avoid operating the washer switch for more than 10 seconds continuously, or when the washer fluid tank is empty. Check washer fluid level frequently, such as at fuel stops.**
- **Use clean water if windshield washer fluid is unavailable. In areas where water freezes in winter, use SUBARU Windshield Washer Fluid or the equivalent. (See Windshield Washer Fluid section in chapter 10.)**

Also, when driving the vehicle when there are freezing temperatures, use non-freezing type wiper blades.

– CONTINUED –

Downloaded from www.Manualslib.com manuals search engine

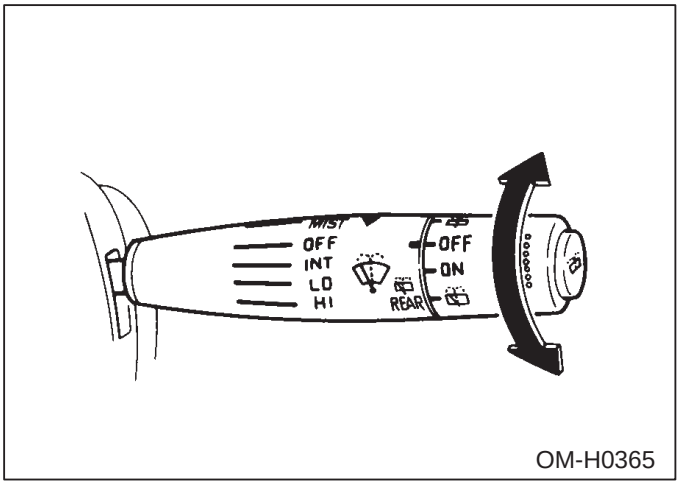

To turn the rear wiper on, turn the knob on the end of the wiper control lever to the “ON” position.
To turn the wiper off, return the knob on the end of the lever to the “OFF” position.

▼ Washer

To wash the rear window while the rear wiper is operating, turn the knob on the end of the wiper control lever counterclockwise to the “ ” position. The washer fluid sprays until you release the knob.

To wash the rear window when the rear wiper is not in use, turn the knob on the end of the wiper control lever clockwise to the “ ” position. The washer fluid sprays and the wiper operates until you release the knob.

■ Wiper deicer (if equipped)

⚠ CAUTION

To prevent the battery from being discharged, do not operate the wiper deicer continuously for any longer than necessary.

The wiper deicer operates only when the ignition switch is in the “ON” position.

Downloaded from www.Manualslib.com manuals search engine

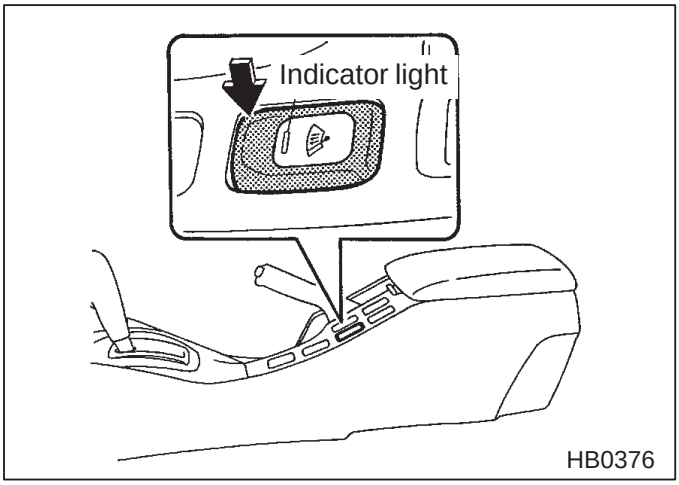

Before turning on the wiper deicer, remove any snow from the windshield. To turn on the wiper deicer, push the switch. The indicator light located on the switch lights up while the wiper deicer is operating.
The wiper deicer will automatically shut off after about 15 minutes. If the wiper blades have been deiced completely before this time, push the switch to turn it off. It also turns off when the ignition switch is turned to the “ACC” or “LOCK” position. If deicing is not complete when you restart your vehicle, you have to push the switch to turn the deicer on again.

Rear window defogger switch

⚠ CAUTION

- **Do not use sharp instruments or window cleaner containing abrasives to clean the inner surface of the rear window. They may damage the conductors printed on the window.**
- **To prevent the battery from being discharged, do not operate the defogger continuously for any longer than necessary.**

The rear window defogger operates only when the ignition switch is in the “ON” position.

– CONTINUED –

Downloaded from www.Manualslib.com manuals search engine

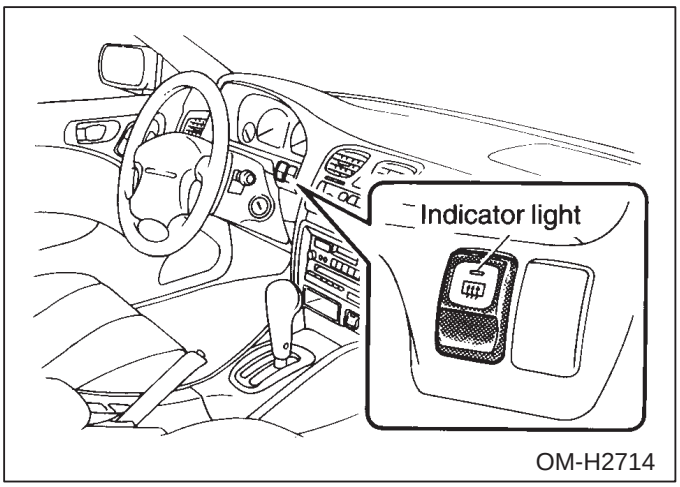

To turn on the defogger, push the switch. To turn it off, push the switch again.
The indicator light located on the switch lights up while the rear window defogger is operating.
The defogger will automatically shut off after about 15 minutes. If the window clears before this time, push the switch to turn it off. It also turns off when the ignition switch is turned to the “ACC” or “LOCK” position. If defrosting or defogging is desired when you restart your vehicle, you have to push the switch to turn it on again.

Horn

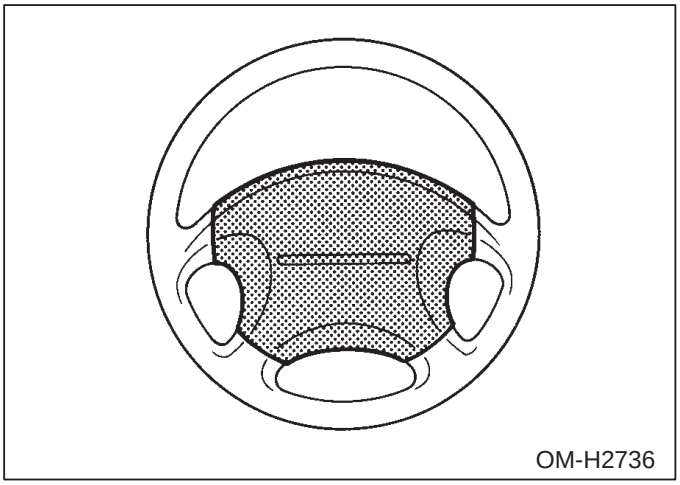

To sound the horn, push the horn pad.

Downloaded from www.Manualslib.com manuals search engine

Mirrors

Always check that the inside and outside mirrors are properly adjusted before you start driving.

■ Inside mirror

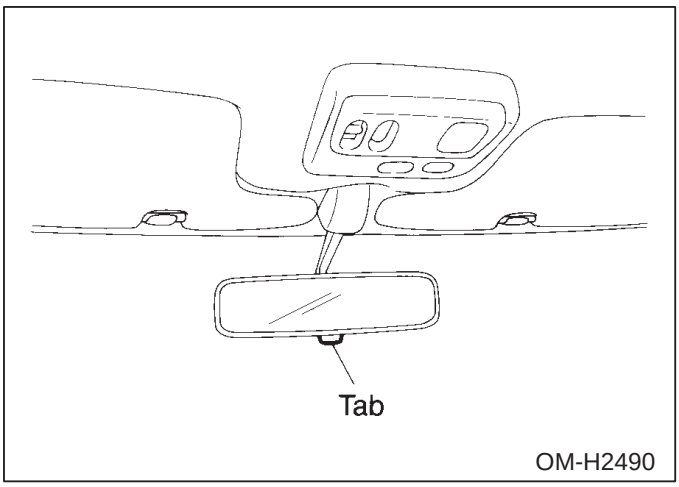

The inside mirror has a day and night position. Pull the tab at the bottom of the mirror toward you for the night position. Push it away for the day position. The night position reduces glare from headlights.

■ Outside mirrors

⚠ WARNING

Objects look smaller in a convex mirror (passenger side) and farther away than when viewed in a flat mirror. Do not use the convex mirror to judge the distances of vehicles behind you when changing lanes. Use the inside mirror (or glance backwards) to determine the actual size and distance of objects that you view in the convex mirror.

– CONTINUED –

Downloaded from www.Manualslib.com manuals search engine

▼ Adjusting mirrors

To adjust the mirrors by hand, push where indicated by the arrows.

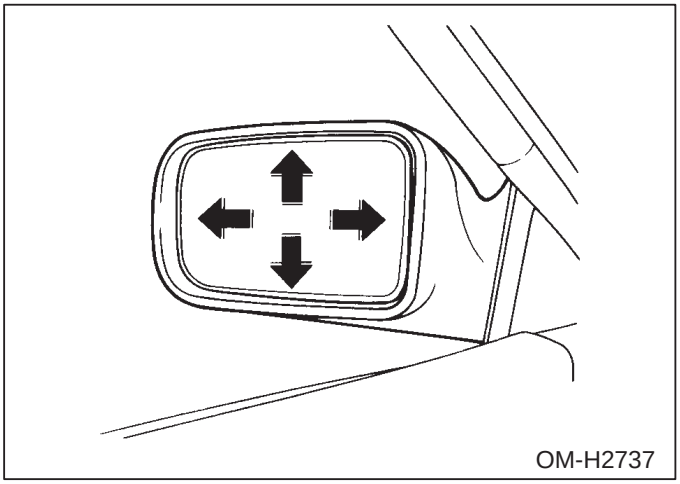

▼ Remote control mirror switch (if equipped)

The remote control mirrors operate only when the ignition switch is in the “ON” or “ACC” position.

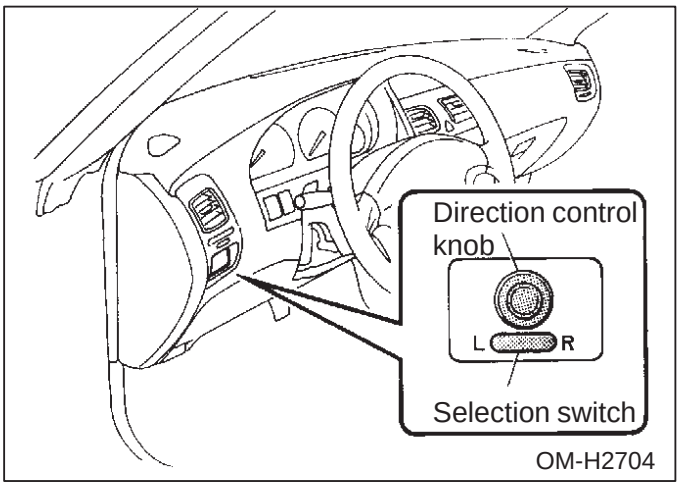

1. Depress either end of the selection switch, “L” for the left and “R” for the right.
2. Move the direction control knob to the direction you want to move the mirror.
3. Return the selection switch to the neutral position to prevent unintentional operation.

The mirrors can also be adjusted manually.

Downloaded from www.Manualslib.com manuals search engine

▼ Remote control mirror with outside mirror defogger (if equipped)

The remote control mirrors operate only when the ignition switch is in the “ON” or “ACC” position.

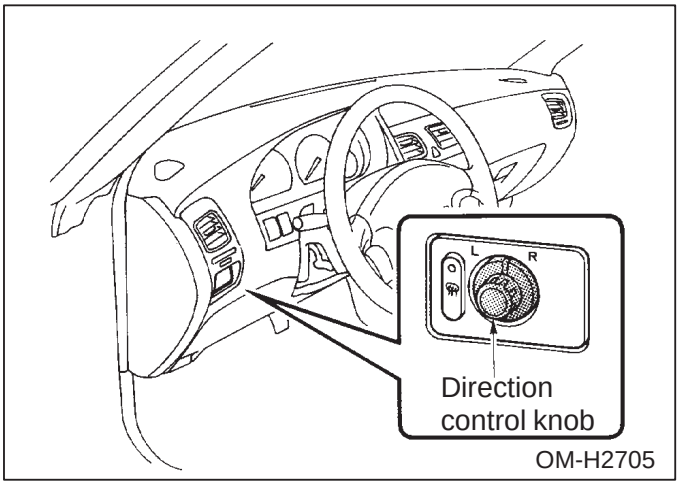

1. Turn the direction control knob to “L” (left side) or ”R” (right side) until it stops.
2. Move the direction control knob to the direction you want to move the mirror.
3. Return the direction control knob to the center position to prevent unintentional operation.

The mirrors can also be adjusted manually.

▼ Outside mirror defogger (if equipped)

⚠ CAUTION

To prevent the battery from being discharged, do not operate the defogger continuously for any longer than necessary.

The outside mirror defogger operates only when the ignition switch is in the “ON” or “ACC” position.

– CONTINUED –

Downloaded from www.Manualslib.com manuals search engine

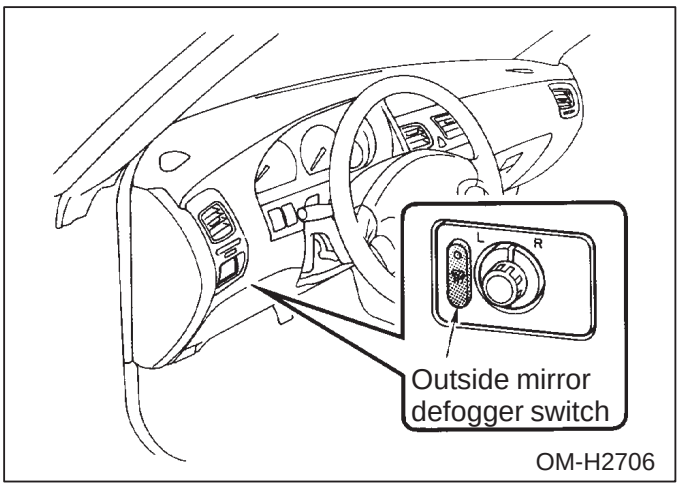

To turn on the outside mirror defogger, push the switch while the engine is running.
The indicator light located on the switch will come on when the outside mirror defogger heater in operation.

To turn it off, push the switch again.

Downloaded from www.Manualslib.com manuals search engine

Climate control

Ventilator 4-2
Heating and air conditioning 4-3
Air flow control buttons 4-3
Temperature control lever 4-4
Fan speed control dial 4-4
Air inlet selection button 4-4
Air conditioner button (if equipped) 4-5
HEATER OPERATION 4-6
Defrosting or defogging the windshield 4-6
Heating and defrosting 4-7
Heating 4-8
Bi.level heating 4-9
Ventilation 4-9
To shut off the outside air 4-10
AIR CONDITIONER OPERATION 4-10
Cooling or dehumidifying 4-10
Defrosting or defogging 4-11
Ventilator (For right hand drive vehicles only) 4-13
Heating and air conditioning (For right hand drive vehicles only) 4-14
Air flow control buttons 4-14
Temperature control lever 4-14
Fan speed control dial 4-14
Air inlet selection button 4-15
Air conditioner button 4-15
HEATER OPERATION 4-16
Defrosting or defogging the windshield 4-16
Heating and defrosting 4-17
Heating 4-18
Bi.level heating 4-19
Ventilation 4-20
To shut off the outside air 4-20
AIR CONDITIONER OPERATION 4-21
Cooling or dehumidifying 4-21
Defrosting or defogging 4-21
Operating tips for heater and air conditioner 4-23
Cleaning ventilator grille 4-23
Efficient cooling after parking in direct sunlight 4-23
Lubrication oil circulation in the refrigerant circuit 4-23
Checking air conditioning system before summer season 4-23
Cooling and dehumidifying in high humidity and low temperature weather condition 4-24
Air conditioner compressor shut-off when engine is heavily loaded 4-24
Refrigerant for your climate control system 4-24

Downloaded from www.Manualslib.com manuals search engine

Ventilator

Adjustable side defroster grille (for driver's side – if equipped)

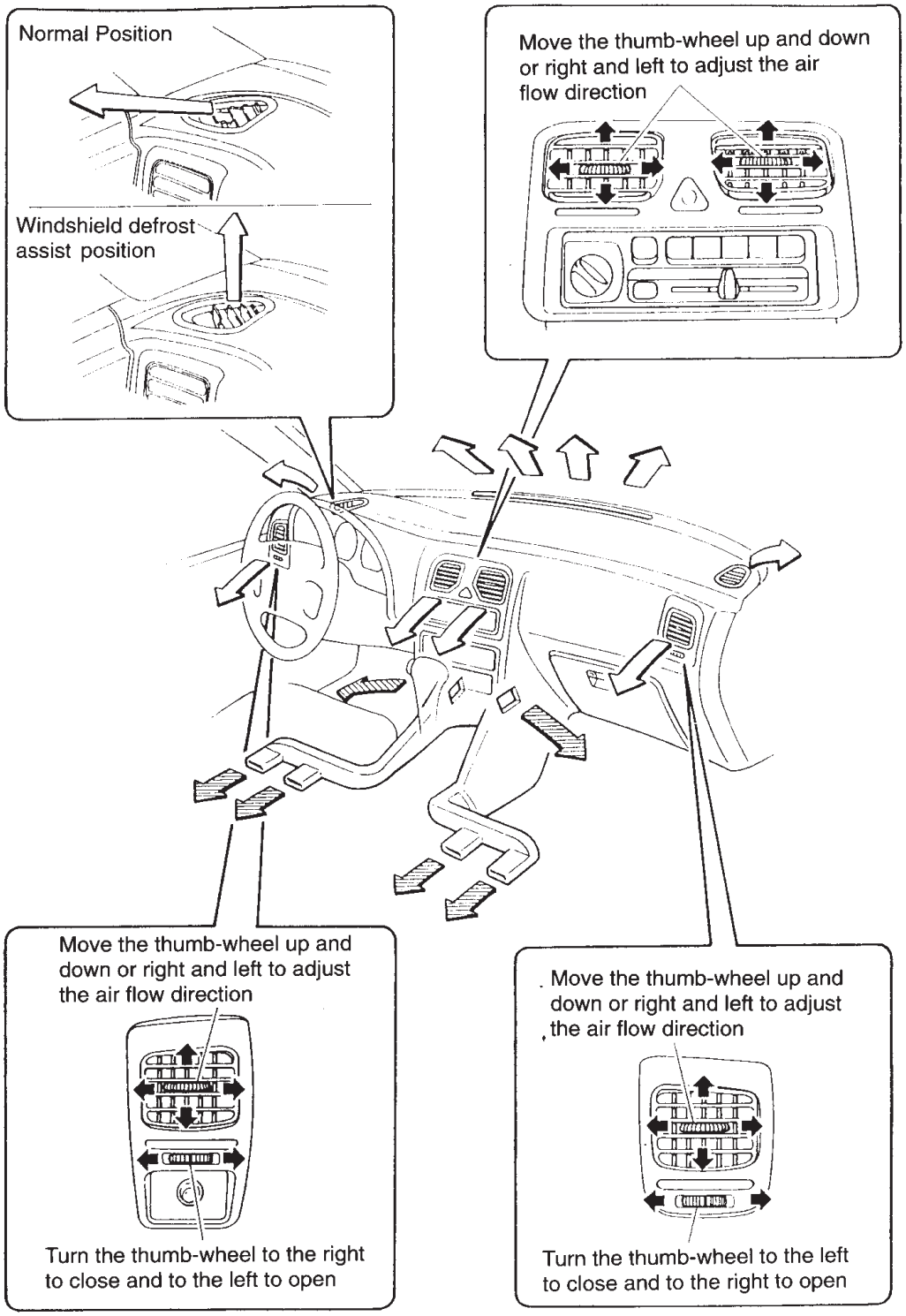

HB0202

Downloaded from www.Manualslib.com manuals search engine

Heating and air conditioning

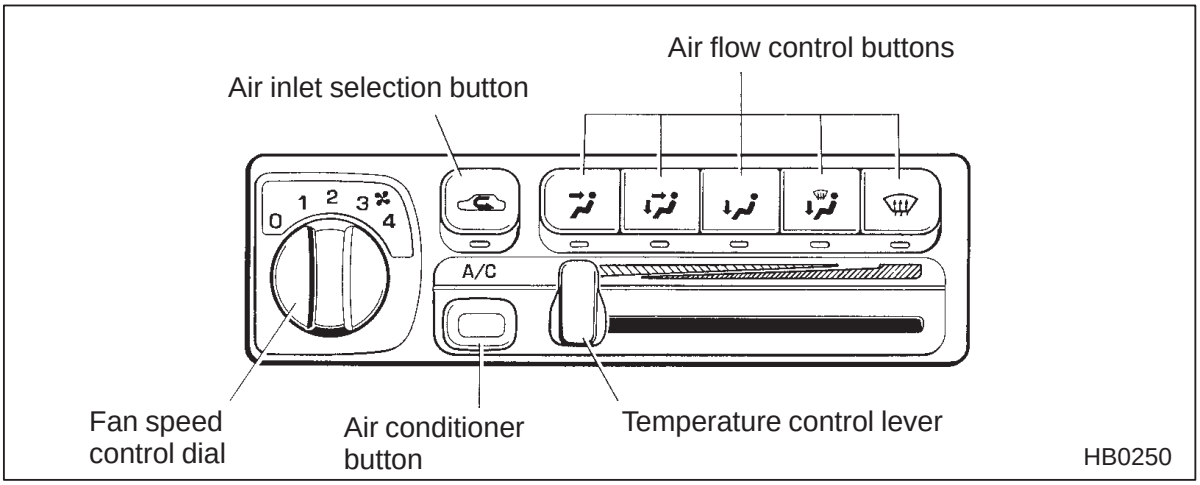

■ Air flow control buttons

These buttons allow you to select the air flow outlets.

: Air flows through the instrument panel outlets.

: Air flows through the instrument panel outlets and the foot outlets.

: Air flows through the foot outlets and some through the windshield defroster outlets.

: Air flows through the windshield defroster outlets and foot outlets.

: Air flows through the windshield defroster outlets.

– CONTINUED –

Downloaded from www.Manualslib.com manuals search engine

NOTE

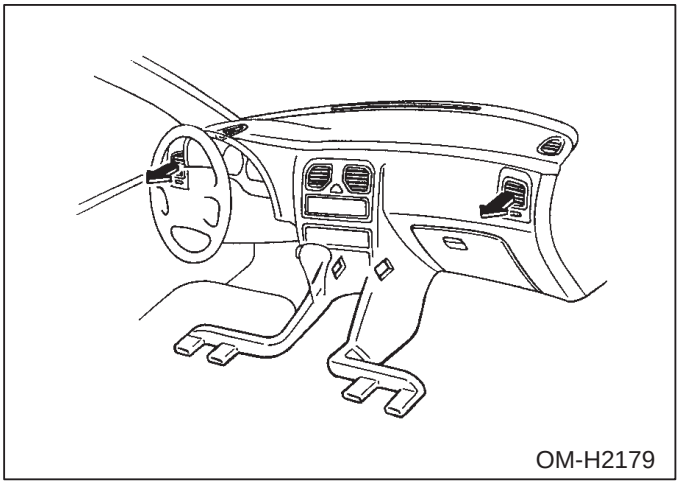

Air flows through the outer instrument panel outlets regardless of the air flow control button position.

- When the "" or "" button is selected, air inlet selection is automatically set to the "OFF" position. (Outside air drawn into the passenger compartment.)
- If your vehicle is equipped with an air conditioner, when the "" button is selected, air inlet selection is automatically set to the "OFF" position and the air conditioner automatically operates regardless of the position of the air conditioner switch.

■ Temperature control lever

This lever regulates the temperature of air flow from the air outlets over a range from the blue area to red area.

■ Fan speed control dial

The fan operates only when the ignition switch is turned to the "ON" position. The fan speed control dial is used to select four fan speeds.

■ Air inlet selection button

⚠ WARNING

Continued operation in the ON position may fog up the windows. Switch to the OFF position as soon as the outside dusty condition clears.

Downloaded from www.Manualslib.com manuals search engine

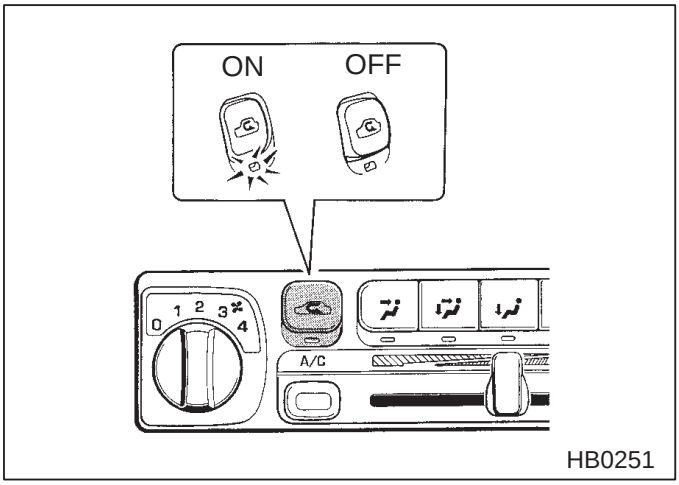

ON position: Interior air is recirculated inside the vehicle. Push the air inlet selection button to the ON position. The indicator light will come on.
OFF position: Outside air is drawn into the passenger compartment. Push the air inlet selection button again to the OFF position. The indicator light will go off.

When the “ ” or “ ” button is selected, air inlet selection is automatically set to the “OFF” position. (Outside air drawn into the passenger compartment.)

■ Air conditioner button (if equipped)

The air conditioner operates only when the engine is running.

Push the air conditioner button while the fan is in operation to turn on the air conditioner. The indicator light will come on.

Push it again to turn off the air conditioner.

– CONTINUED –

Downloaded from www.Manualslib.com manuals search engine

HEATER OPERATION

■ Defrosting or defogging the windshield

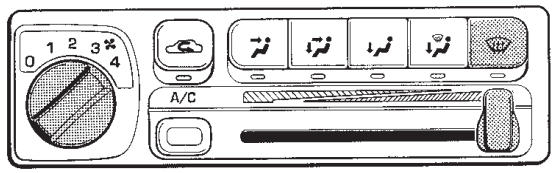

HB0252

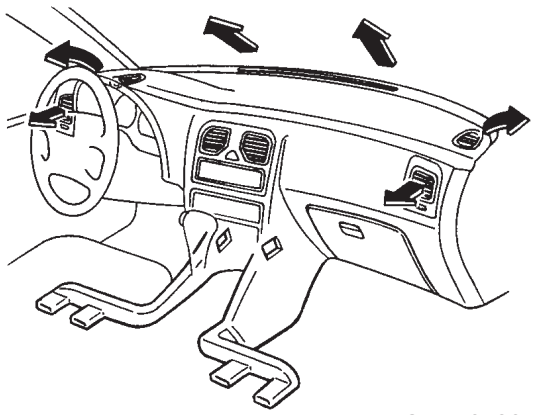

OM-H2182

To direct warm air to the windshield and front door windows:

1. Push the " " button in.
2. Set the temperature control lever all the way to the right in the red area.
3. Set the fan speed control dial to the highest speed.

▼ Adjustable side defroster grille (for driver's side – if equipped)

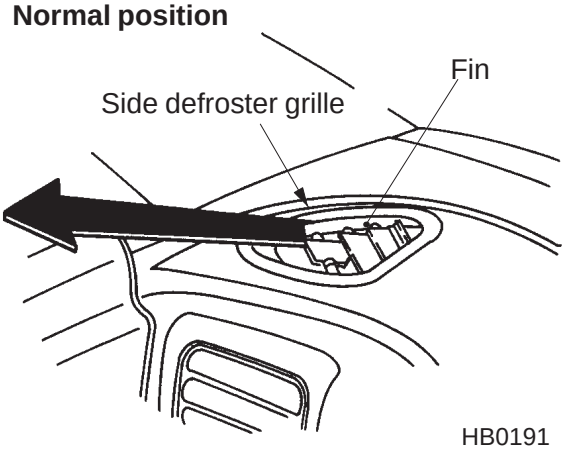

HB0191

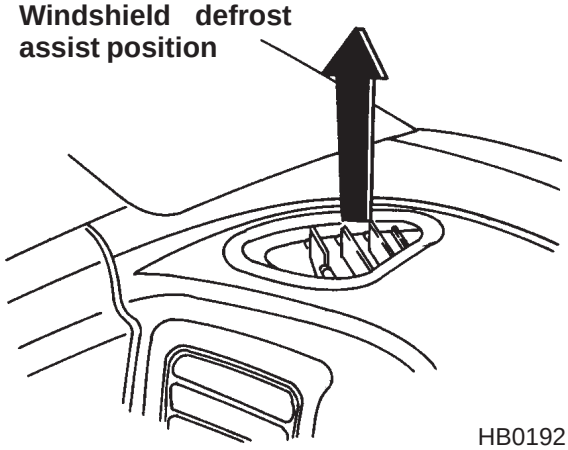

HB0192

The driver's side defroster grille is adjustable. The normal positions as shown in the diagram directs warm air to the side glass. When more rapid defrosting of the windshield is desired, the air flow can be directed temporarily toward the windshield to assist the windshield

Downloaded from www.Manualslib.com manuals search engine

defroster. If this is done, the driver's side grille should always be returned to its normal positions so that the warm air flow can then be used to defrost the driver's side window.

■ Heating and defrosting

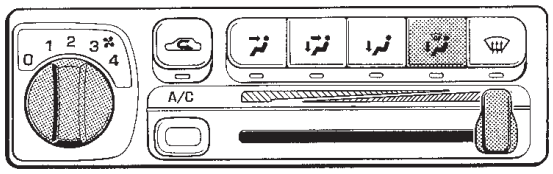

HB0253

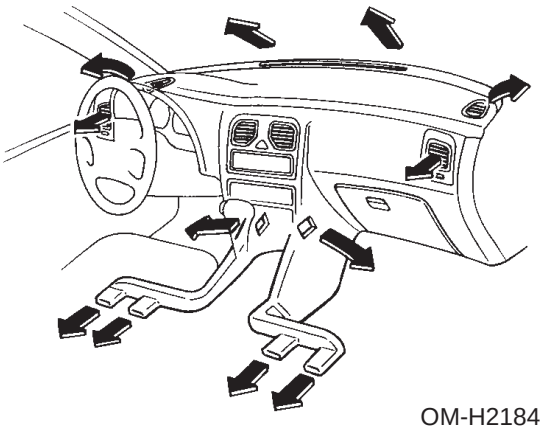

OM-H2184

To direct warm air toward the floor and the windshield:

1. Push the " " button in.
2. Set the temperature control lever to the most comfortable level.
3. Set the fan speed control dial to the desired speed.

▼ Adjustable side defroster grille (for driver's side – if equipped)

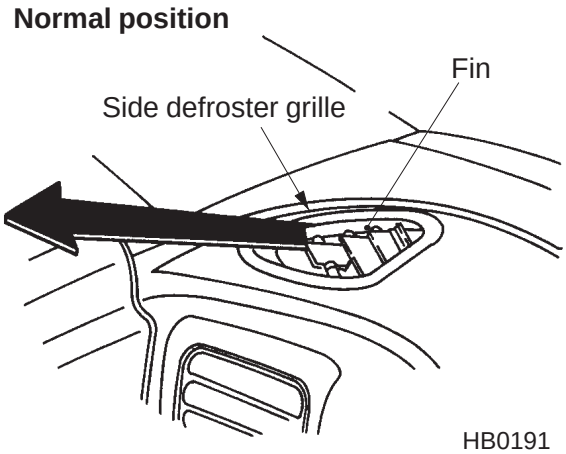

HB0191

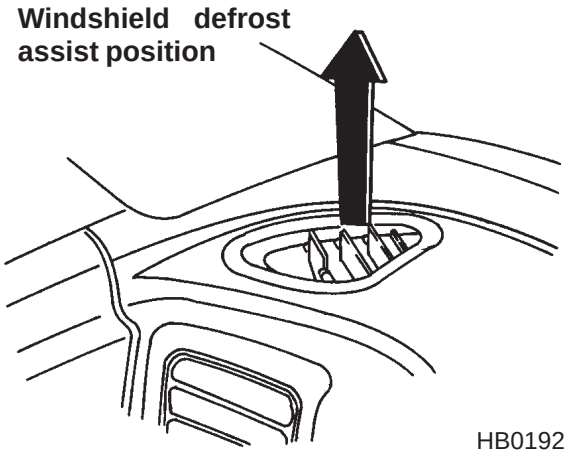

HB0192

The driver's side defroster grille is adjustable. The normal positions as shown in the diagram directs warm air to the side glass. When more rapid defrosting of the windshield is desired, the air flow can be

– CONTINUED –

Downloaded from www.Manualslib.com manuals search engine

directed temporarily toward the windshield to assist the windshield defroster. If this is done, the driver's side grille should always be returned to its normal positions so that the warm air flow can then be used to defrost the driver's side window.

■ Heating

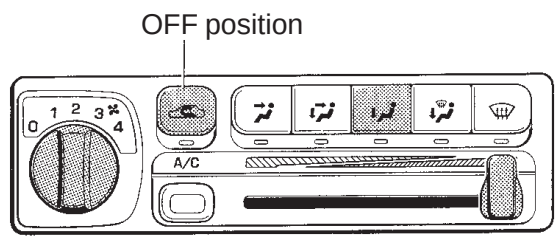

HB0254

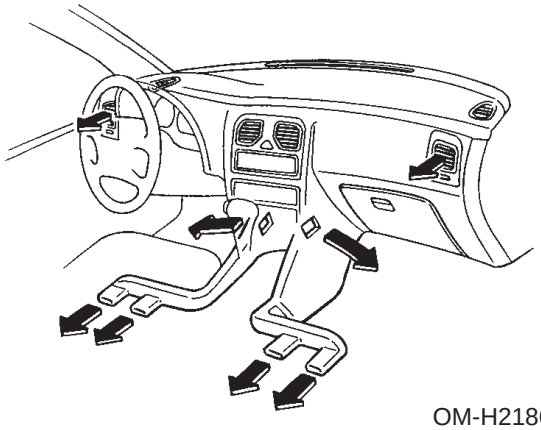

OM-H2186

To direct warm air toward the floor:

1. Set the air inlet selection button to the "OFF" position.
2. Push the " ↓ " button in.
3. Set the temperature control lever to the most comfortable level.
4. Set the fan speed control dial to the desired speed.

To stop the warm air coming from the ventilator at each side of the instrument panel, turn each ventilator thumb-wheel to the " ☒ " position.

Downloaded from www.Manualslib.com manuals search engine

■ Bi.level heating

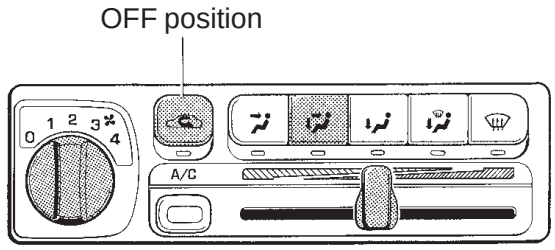

HB0255

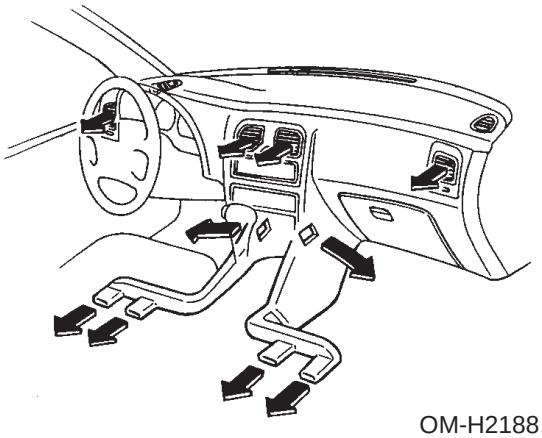

OM-H2188

To direct air of different temperatures from the instrument panel outlets and foot outlets. The cool air will flow from the instrument panel outlets and warm air flows from the foot outlets.

1. Set the air inlet selection button to the “OFF” position.
2. Push the “ ” button in.
3. Set the temperature control lever to the desired temperature level.
4. Set the fan speed control dial to the desired speed.

Setting the temperature control lever fully turned to the red area or blue area decreases the temperature difference between the air from instrument panel outlets and the air from foot outlets.

■ Ventilation

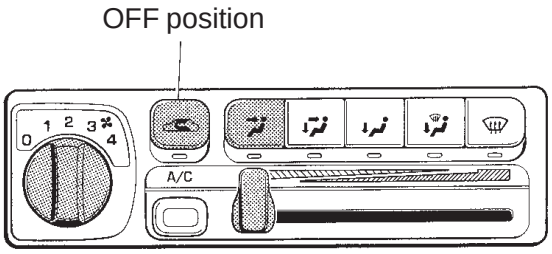

HB0256

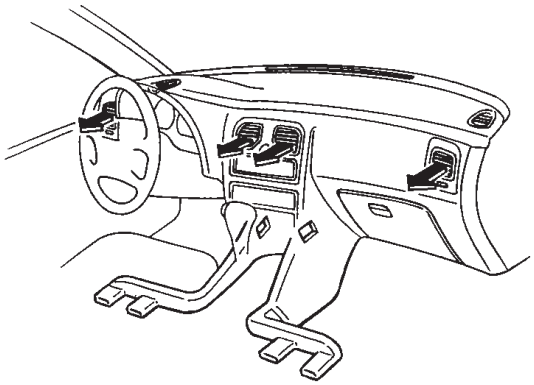

OM-H2190

– CONTINUED –

Downloaded from www.Manualslib.com manuals search engine

To force outside air through the instrument panel outlets:

1. Set the air inlet selection button to the “OFF” position.
2. Push the “ ” position.
3. Set the temperature control lever all the way to the left in the blue area.
4. Set the fan control dial to the desired level.

■ To shut off the outside air

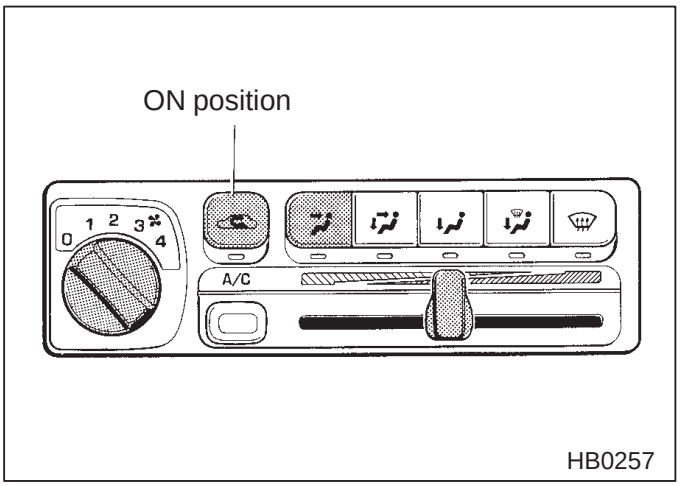

1. Set the fan control dial to the “OFF” position.
2. Set the air inlet selection button to the “ON” position.

AIR CONDITIONER OPERATION

■ Cooling or dehumidifying

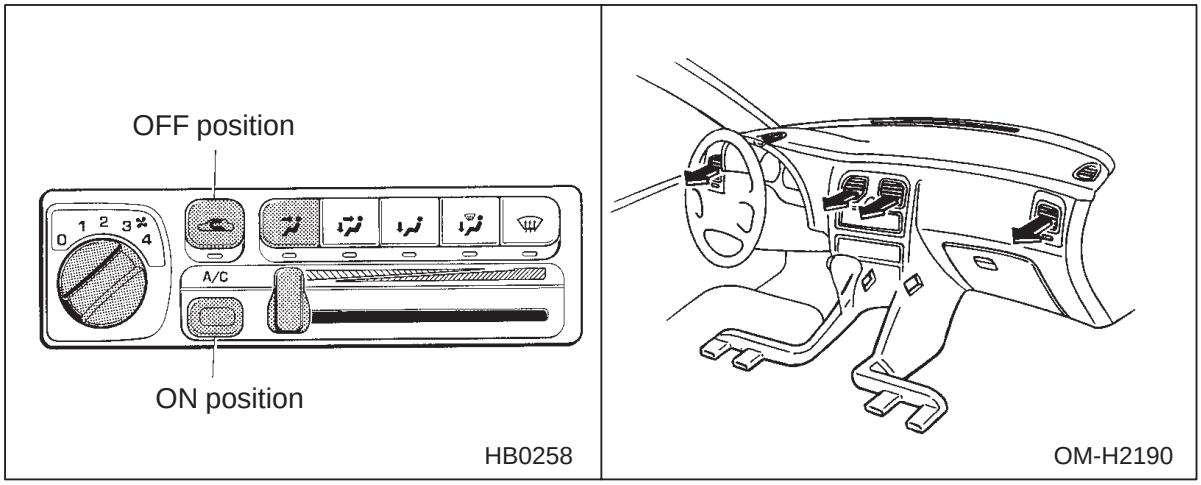

Downloaded from www.Manualslib.com manuals search engine

For cooling and dehumidification of the passenger compartment, air flows through the instrument panel outlets:

1. Set the air inlet selection button to the “OFF” position.
2. Push the “ ” button in.
3. Push the air conditioner button on.
4. Set the temperature control lever to the blue area.
5. Set the fan speed control dial to the highest speed.

■ Defrosting or defogging

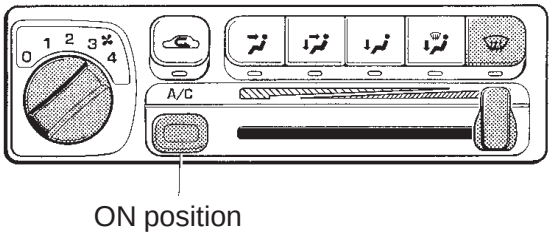

HB0259

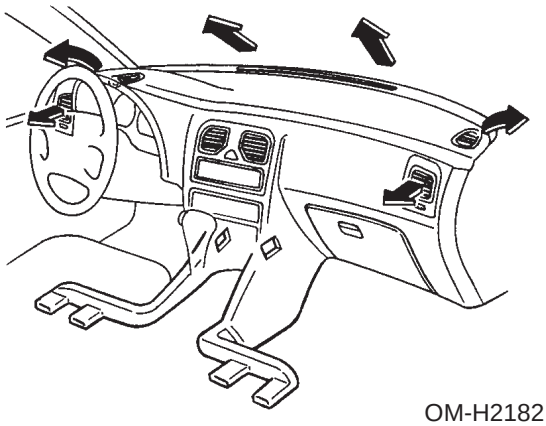

OM-H2182

To direct warm air to the windshield and front door windows:

1. Push the “ ” button in.
2. Set the temperature control lever to the red area.
3. Set the fan speed control dial to the highest speed.

To stop the warm air coming from the ventilator at each side of the instrument panel, turn each ventilator thumb-wheel to the “ ☒ ” position.

– CONTINUED –

Downloaded from www.Manualslib.com manuals search engine

▼ Adjustable side defroster grille (for driver's side – if equipped)

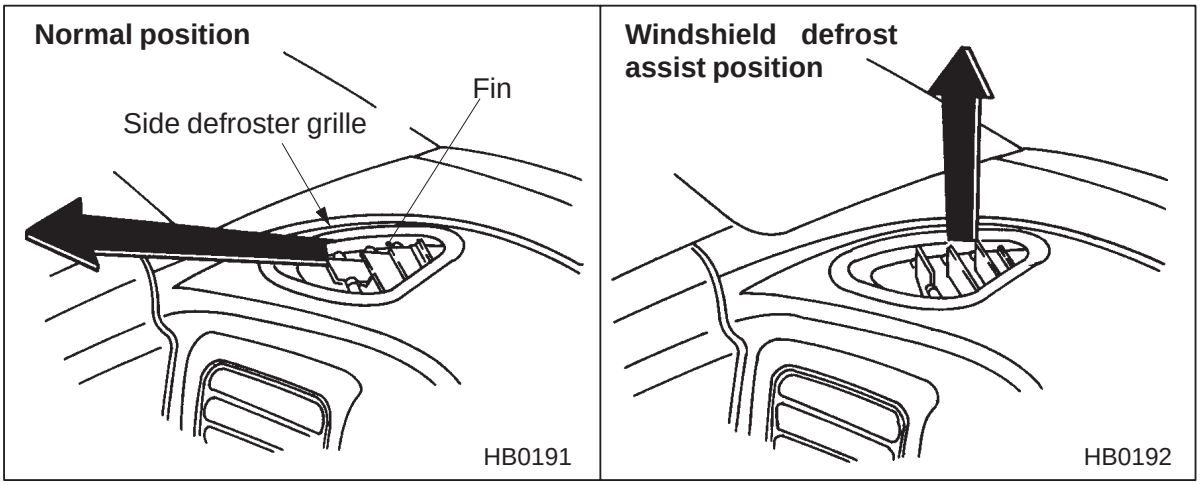

The driver's side defroster grille is adjustable. The normal positions as shown in the diagram directs warm air to the side glass. When more rapid defrosting of the windshield is desired, the air flow can be directed temporarily toward the windshield to assist the windshield defroster. If this is done, the driver's side grille should always be returned to its normal positions so that the warm air flow can then be used to defrost the driver's side window.

Downloaded from www.Manualslib.com manuals search engine

Ventilator (For right hand drive vehicles only)

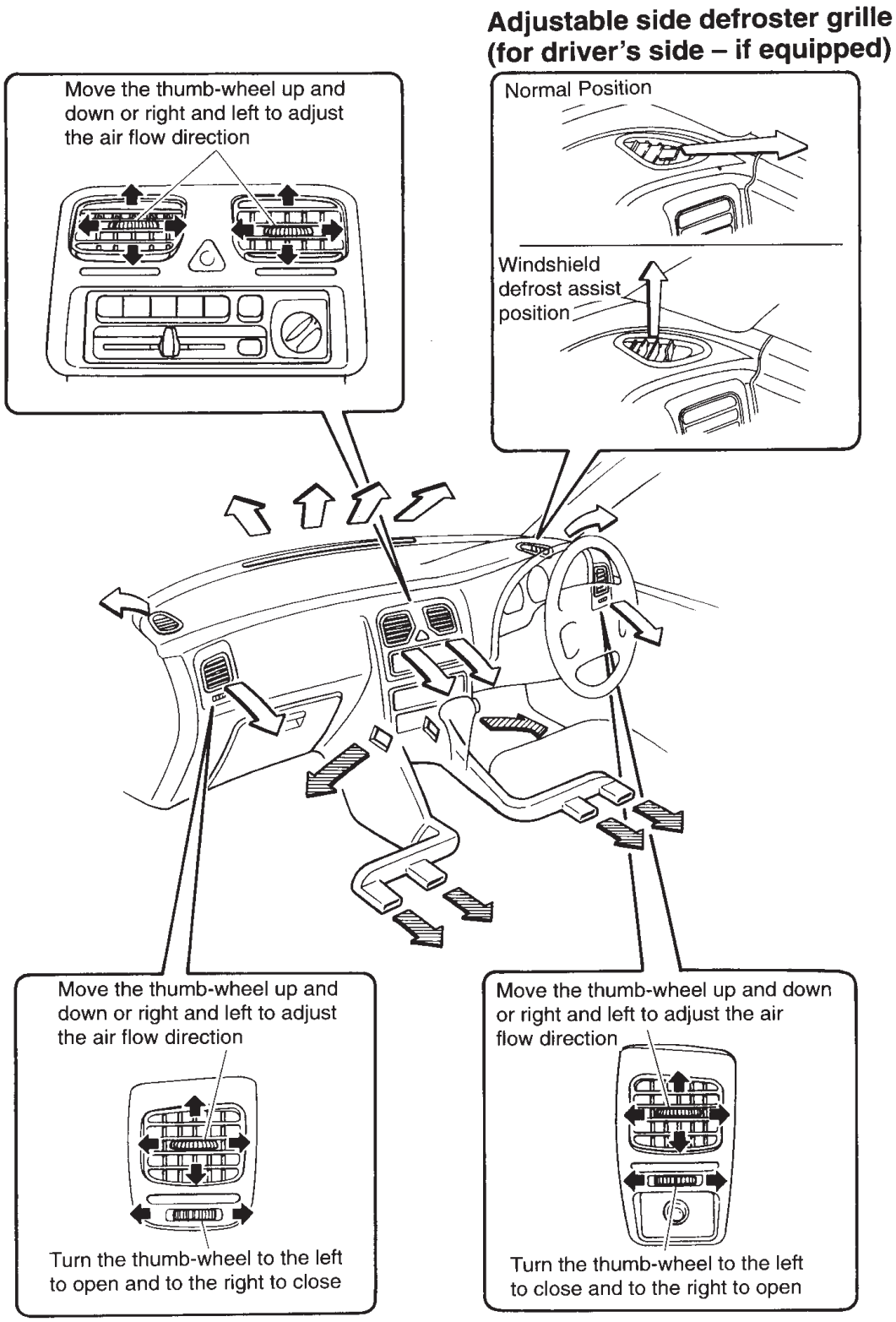

HB0203

Downloaded from www.Manualslib.com manuals search engine

Heating and air conditioning (For right hand drive vehicles only)

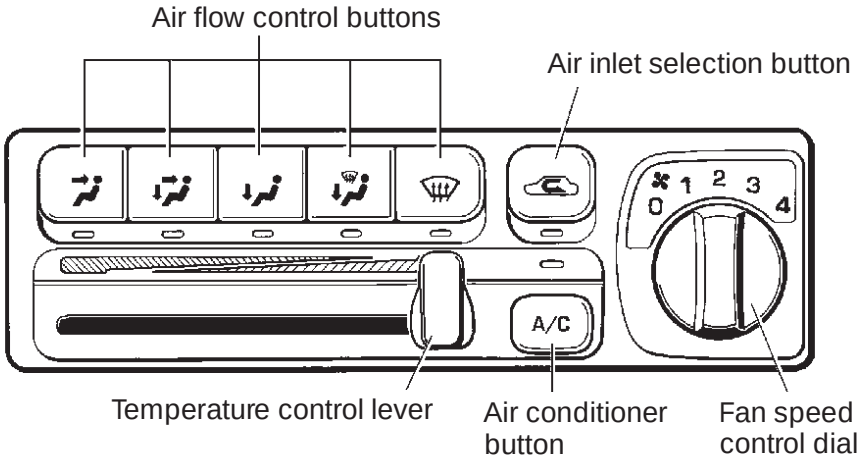

■ Air flow control buttons

These buttons allow you to select the air flow outlets.

: Air flows through the instrument panel outlets.

: Air flows through the instrument panel outlets and the foot outlets.

: Air flows through the foot outlets and some through the windshield defroster outlets.

: Air flows through the windshield defroster outlets and foot outlets.

: Air flows through the windshield defroster outlets.

■ Temperature control lever

This lever regulates the temperature of air flow from the air outlets over a range from the blue area to red area.

■ Fan speed control dial

The fan operates only when the ignition switch is turned to the “ON” position. The fan speed control dial is used to select four fan speeds.

Downloaded from www.Manualslib.com manuals search engine

■ Air inlet selection button

⚠ WARNING

Continued operation in the ON position may fog up the windows. Switch to the OFF position as soon as the outside dusty condition clears.

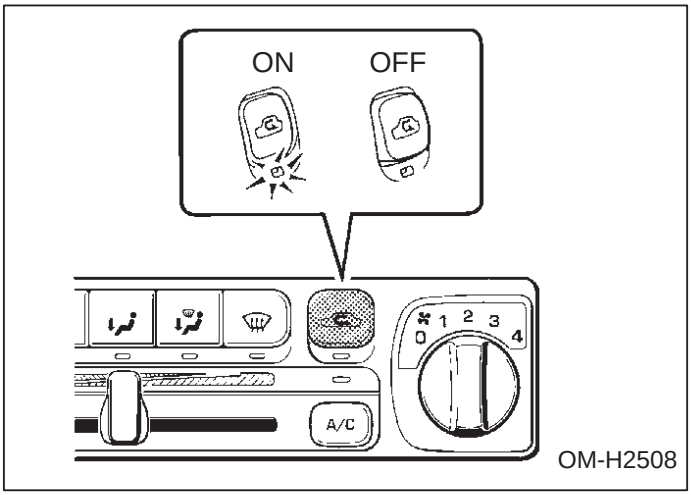

ON position: Interior air is recirculated inside the vehicle. Push the air inlet selection button to the ON position. The indicator light will come on.
OFF position: Outside air is drawn into the passenger compartment. Push the air inlet selection button again to the OFF position. The indicator light will go off.

■ Air conditioner button

The air conditioner operates only when the engine is running.

Push the air conditioner button while the fan is in operation to turn on the air conditioner. The indicator light will come on.

Push it again to turn off the air conditioner.

– CONTINUED –

Downloaded from www.Manualslib.com manuals search engine

HEATER OPERATION

■ Defrosting or defogging the windshield

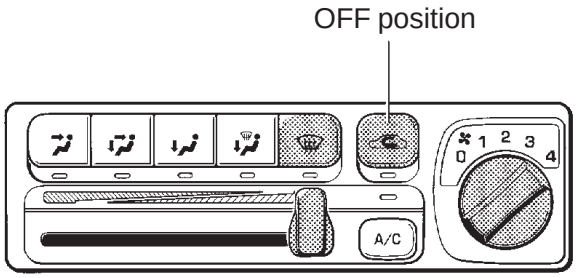

OM-H2509

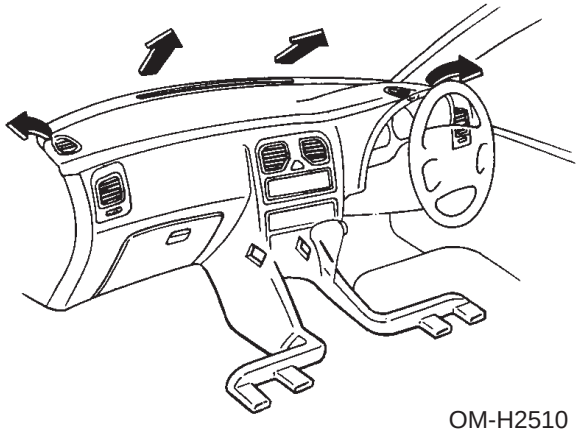

OM-H2510

To direct warm air to the windshield and front door windows:

1. Set the air inlet selection button to the “OFF” position.
2. Push the “ ” button in.
3. Set the temperature control lever all the way to the right in the red area.
4. Set the fan speed control dial to high.

▼ Adjustable side defroster grille (for driver’s side – if equipped)

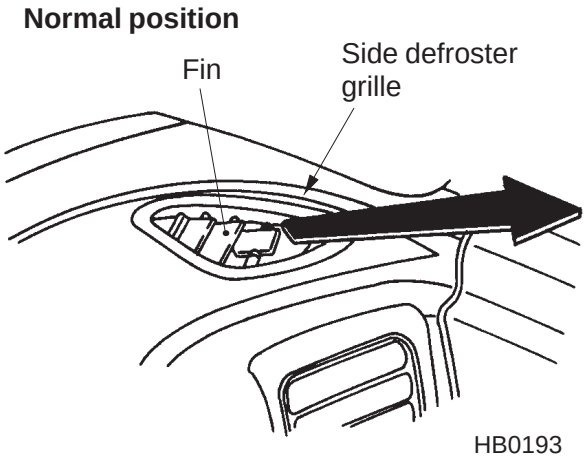

HB0193

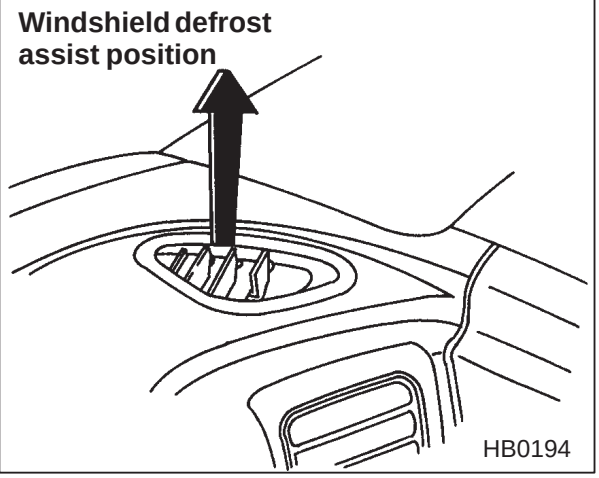

HB0194

The driver’s side defroster grille is adjustable. The normal positions as shown in the diagram directs warm air to the side glass. When more rapid defrosting of the windshield is desired, the air flow can be

Downloaded from www.Manualslib.com manuals search engine

directed temporarily toward the windshield to assist the windshield defroster. If this is done, the driver's side grille should always be returned to its normal positions so that the warm air flow can then be used to defrost the driver's side window.

■ Heating and defrosting

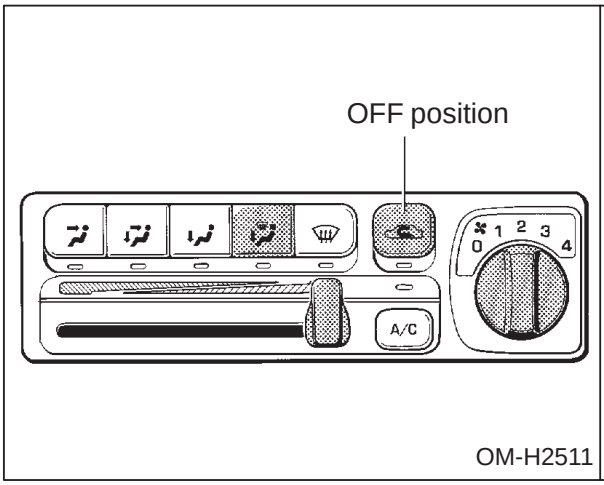

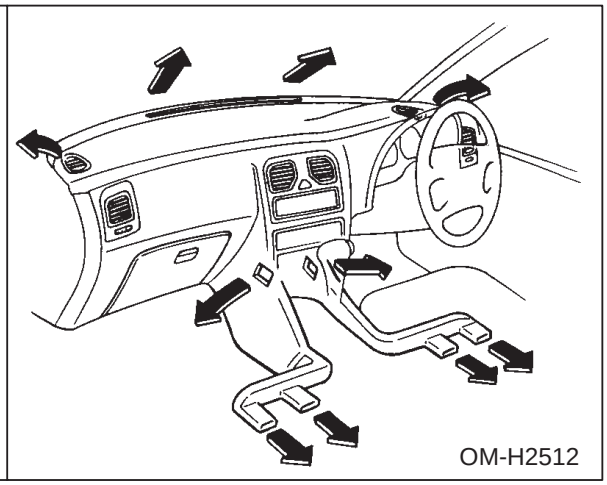

To direct warm air toward the floor and the windshield:

1. Set the air inlet selection button to the "OFF" position.
2. Push the " " button in.
3. Set the temperature control lever to the most comfortable level.
4. Set the fan speed control dial to the desired speed.

▼ Adjustable side defroster grille (for driver's side – if equipped)

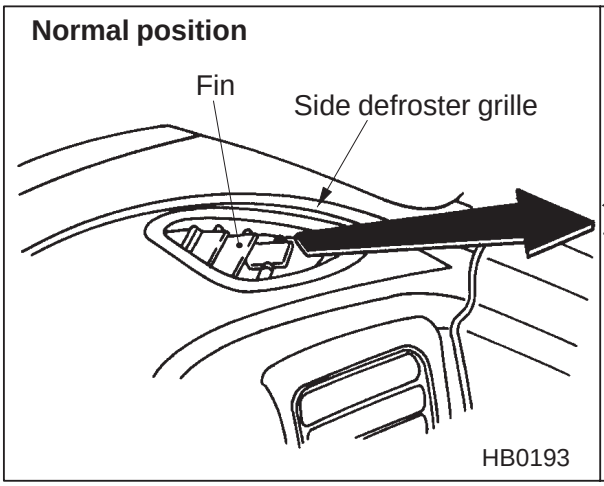

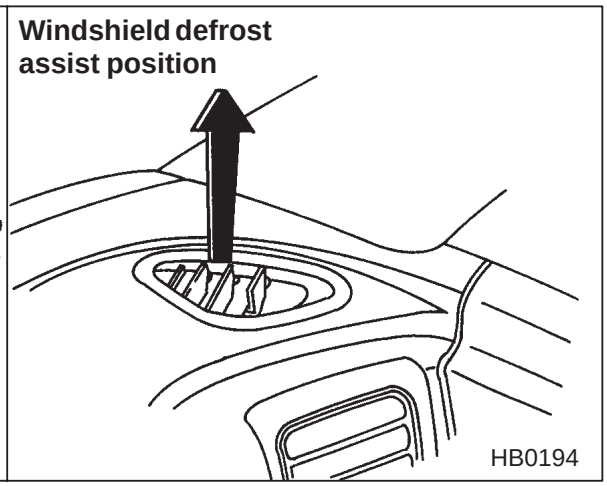

– CONTINUED –

Downloaded from www.Manualslib.com manuals search engine

The driver's side defroster grille is adjustable. The normal positions as shown in the diagram directs warm air to the side glass. When more rapid defrosting of the windshield is desired, the air flow can be directed temporarily toward the windshield to assist the windshield defroster. If this is done, the driver's side grille should always be returned to its normal positions so that the warm air flow can then be used to defrost the driver's side window.

■ Heating

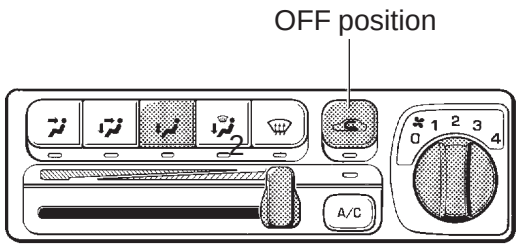

OM-H2513

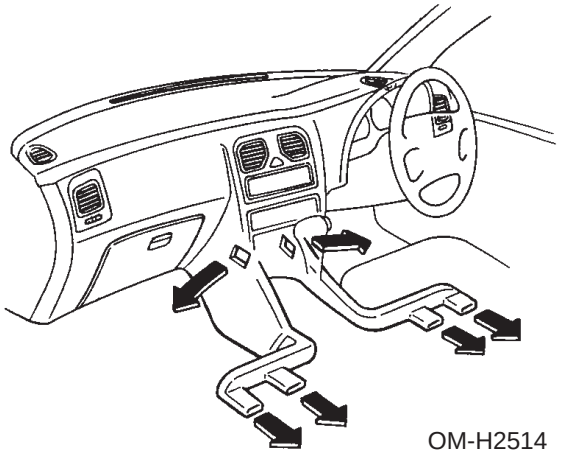

OM-H2514

To direct warm air toward the floor:

1. Set the air inlet selection button to the "OFF" position.
2. Push the " " button in.
3. Set the temperature control lever to the most comfortable level.
4. Set the fan speed control dial to the desired speed.

Downloaded from www.Manualslib.com manuals search engine

■ Bi.level heating

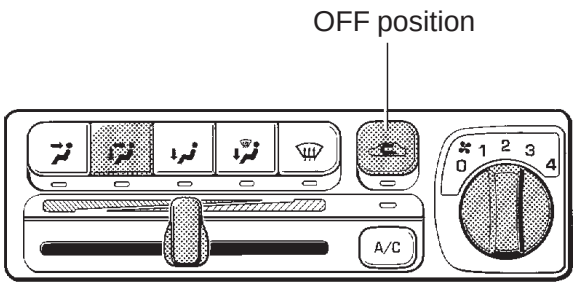

OM-H2515

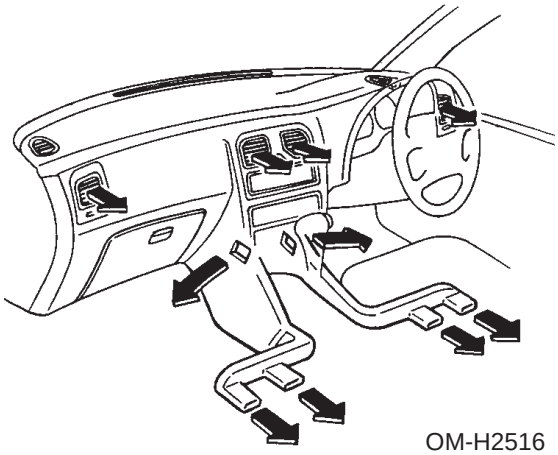

OM-H2516

To direct air of different temperatures from the instrument panel outlets and foot outlets. The cool air will flow from the instrument panel outlets and warm air flows from the foot outlets.

1. Set the air inlet selection button to the “OFF” position.
2. Push the “ ” button in.
3. Set the temperature control lever to the desired temperature level.
4. Set the fan speed control dial to the desired speed.

Setting the temperature control lever fully turned to the red area or blue area decreases the temperature difference between the air from instrument panel outlets and the air from foot outlets.

– CONTINUED –

Downloaded from www.Manualslib.com manuals search engine

■ Ventilation

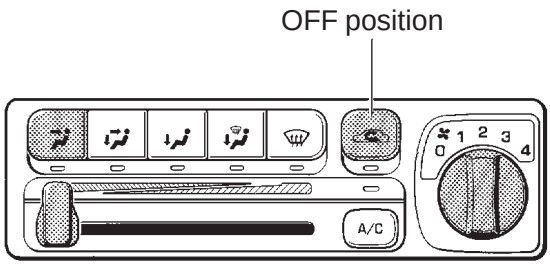

OM-H2517

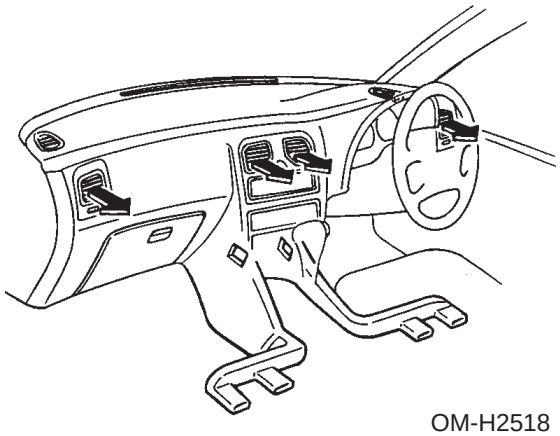

OM-H2518

To force outside air through the instrument panel outlets:

1. Set the air inlet selection button to the “OFF” position.
2. Push the “ ” position.
3. Set the temperature control lever all the way to the left in the blue area.
4. Set the fan speed control dial to the desired level.

■ To shut off the outside air

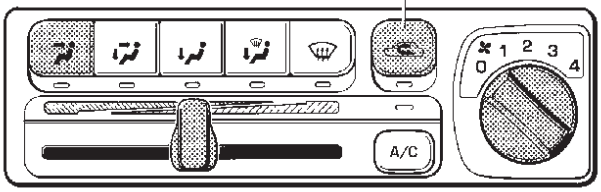

OM-H2519

1. Set the fan control dial to the “OFF” position.
2. Set the air inlet selection button to the “ON” position.

Downloaded from www.Manualslib.com manuals search engine

AIR CONDITIONER OPERATION

■ Cooling or dehumidifying

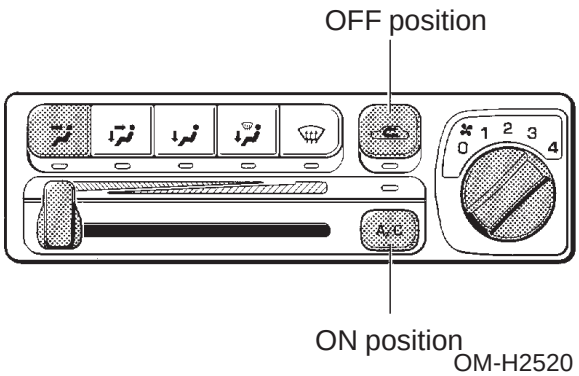

OM-H2520

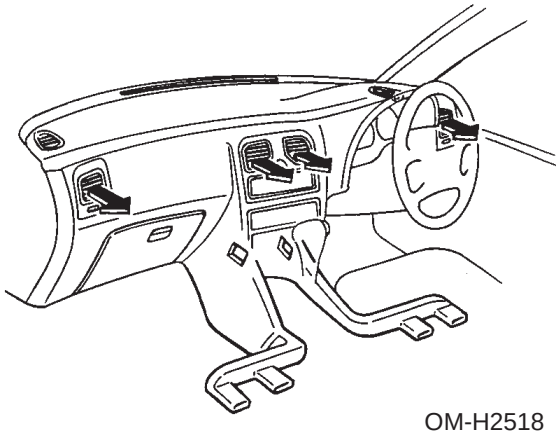
OM-H2518

For cooling and dehumidification of the passenger compartment, air flows through the instrument panel outlets:

1. Set the air inlet selection button to the “OFF” position.
2. Push the “ ” button in.
3. Push the air conditioner button on.
4. Set the temperature control lever to the blue area.
5. Set the fan speed control dial to the highest speed.

■ Defrosting or defogging

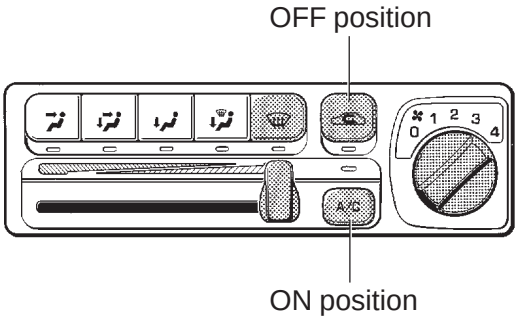

OM-H2522

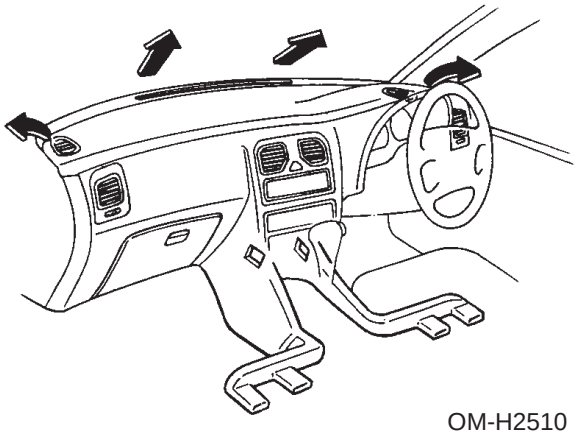
OM-H2510

To direct warm air to the windshield and front door windows:

1. Set the air inlet selection button to the “OFF” position.

– CONTINUED –

Downloaded from www.Manualslib.com manuals search engine

2. Push the “ ” button in.
3. Push the air conditioner button on.
4. Set the temperature control lever to the red area.
5. Set the fan control dial to the highest speed.

▼ Adjustable side defroster grille (for driver’s side – if equipped)

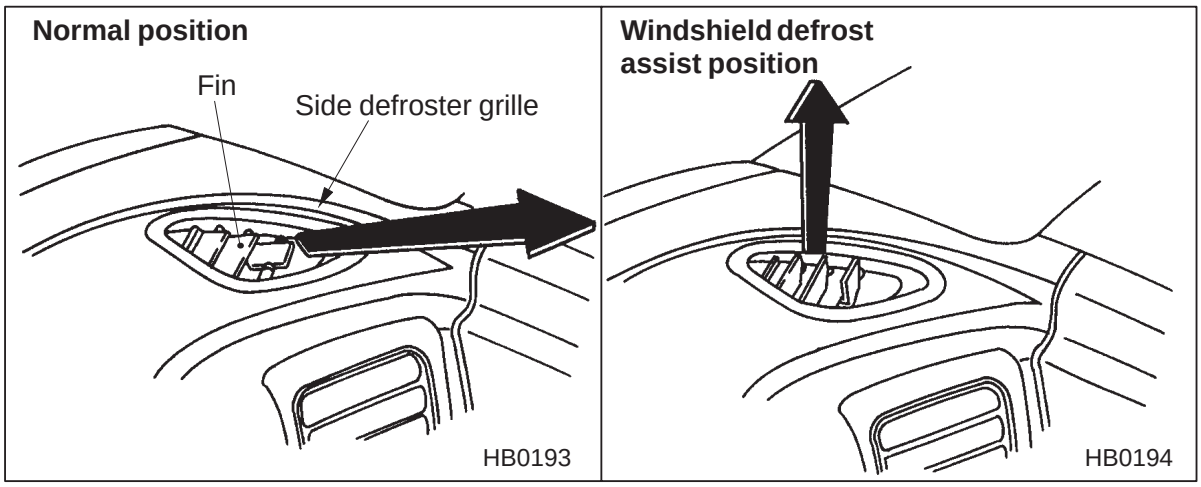

The driver’s side defroster grille is adjustable. The normal positions as shown in the diagram directs warm air to the side glass. When more rapid defrosting of the windshield is desired, the air flow can be directed temporarily toward the windshield to assist the windshield defroster. If this is done, the driver’s side grille should always be returned to its normal positions so that the warm air flow can then be used to defrost the driver’s side window.

Downloaded from www.Manualslib.com manuals search engine

Operating tips for heater and air conditioner

■ Cleaning ventilator grille

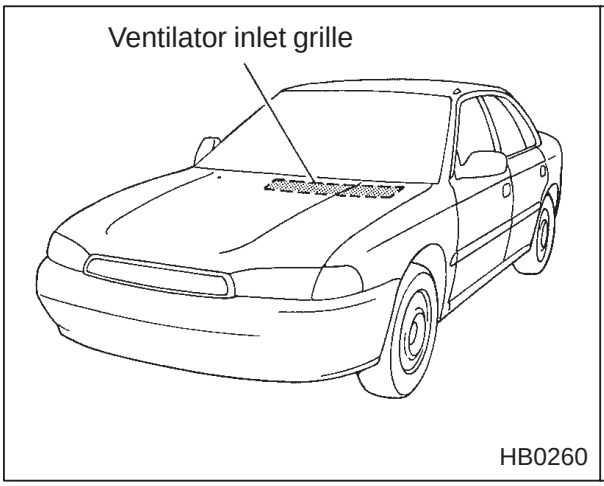

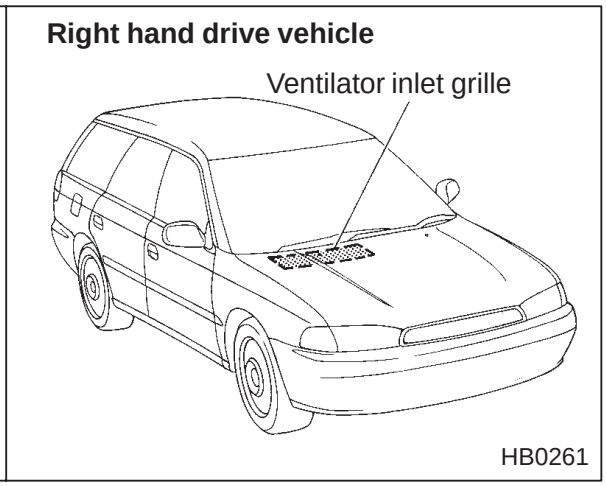

Always keep the front ventilator inlet grille free of snow, leaves, or other obstructions to ensure efficient heating and defrosting. Since the condenser is located in front of the radiator, this area should be kept clean because cooling performance is impaired by any accumulation of insects and leaves on the condenser.

■ Efficient cooling after parking in direct sunlight

After parking in direct sunlight, drive with the windows open for a few minutes to allow outside air to circulate into the heated interior. This results in quicker cooling by the air conditioner. Keep the windows closed during the operation of the air conditioner for maximum cooling efficiency.

■ Lubrication oil circulation in the refrigerant circuit

Operate the air conditioner compressor at a low engine speed (at idle or low driving speeds) a few minutes each month during the off-season to circulate its oil.

■ Checking air conditioning system before summer season

Check the air conditioner unit for refrigerant leaks, hose conditions, and proper operation each spring. This check is best performed by your SUBARU dealer.

– CONTINUED –

Downloaded from www.Manualslib.com manuals search engine

■ Cooling and dehumidifying in high humidity and low temperature weather condition

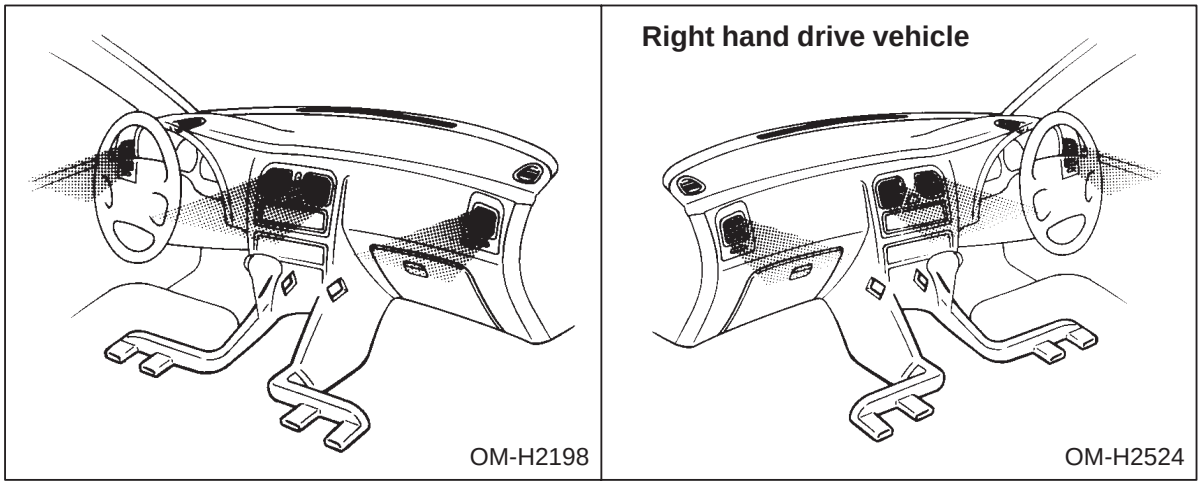

Under certain weather conditions (high relative humidity, low temperatures, etc.) a small amount of water vapor emission from the air outlets may be noticed. This condition is normal and does not indicate any problem with the air conditioning system.

■ Air conditioner compressor shut-off when engine is heavily loaded

To improve acceleration and gas mileage, this air conditioner compressor is designed to temporarily shut off during air conditioner operation whenever the accelerator is fully depressed such as a rapid acceleration or driving on a steep upgrade.

■ Refrigerant for your climate control system

Your air conditioner is ozone friendly and uses the refrigerant HFC134a. Therefore, the method of adding, changing or checking the refrigerant is different from the method for CFC12 (freon). Consult your SUBARU dealer for service. Repairs needed as a result of using the wrong refrigerant are not covered under warranty.

Downloaded from www.Manualslib.com manuals search engine

Audio

Radio 5-4
- Antenna 5-4
- FM reception 5-5

AM/FM stereo radio with cassette player (if equipped) 5-5
- RADIO OPERATION (for radio with weather band) 5-5
- Weathr band (WB) 5-6
- Power switch and volume control (ON· VOL) 5-6
- Fader and balance control (FADER and BAL) 5-7
- Bass and treble control (BASS and TREB) 5-7
- Band selection switch (BAND) 5-8
- Stereo indicator 5-8
- Manual tuning (TUNE) 5-8
- Automatic tuning (SCAN) 5-9
- Selecting preset stations 5-9
- How to preset stations 5-9
- RADIO OPERATION (for radio without weather band) 5-10
- Power switch and volume control (ON· VOL) 5-10
- Fader and balance control (FADER and BAL) 5-11
- Bass and treble control (BASS and TREB) 5-11
- FM/AM selection switch (FM· AM) 5-12
- Stereo indicator 5-12
- Manual tuning (TUNE) 5-12
- Automatic tuning (SCAN) 5-12
- Selecting preset stations 5-13
- How to preset stations 5-13
- CASSETTE PLAYER OPERATION 5-14
- Cassette slot 5-14
- Tape travel indicators 5-14
- Program switching button (PROG) 5-15
- Fast-forward button (FF) 5-15
- Rewind button (REW) 5-15
- Stop and eject button (STOP/EJ) 5-15
- Tape program sensor button (TPS) 5-15
- Repeat button (RPT) 5-16
- Dolby NR button ( ) 5-16
- Auto metal sensor 5-16
- Metal tape indicator (MTL) (if equipped) 5-16
- CLOCK FUNCTION 5-16
- When turning on the radio 5-17
- Setting the time 5-17

Downloaded from www.Manualslib.com manuals search engine

AM/FM stereo radio with cassette player (if equipped) 5-18
RADIO OPERATION 5-18
Power switch and volume control (SW/VOL) 5-19
Tone and balance control (TONE/BAL) 5-19
FM/AM selection button (FM AM) 5-22
Stereo indicator 5-22
Manual tuning (TUNE) 5-22
Automatic tuning (SCAN) 5-22
Selecting preset stations 5-23
How to preset stations 5-23
CASSETTE PLAYER OPERATION 5-24
Cassette slot 5-24
Tape travel indicators 5-24
Program switching buttons (PROG) 5-25
Fast-forward button (FF) 5-25
Rewind button (REW) 5-25
Stop and eject button (EJECT) 5-25
Dolby NR button ( ) 5-25
CLOCK FUNCTION 5-26
When turning on the radio 5-26
Setting the time 5-26
AM/FM/WB stereo radio with cassette and compact disc player (if equipped) 5-27
RADIO OPERATION 5-27
Power switch and volume control (PWR/VOL) 5-28
Tone control (AUDIO) 5-28
Fader and balance control (FAD/BAL) 5-30
FM/AM selection button (FM/AM) 5-32
Stereo indicator 5-32
Weather band button (WB) 5-32
Manual tuning (TUNE) 5-32
Automatic tuning (SCAN) 5-33
Selecting preset stations 5-33
How to preset stations 5-33
CASSETTE PLAYER OPERATION 5-34
To play back a cassette tape 5-35
Tape travel indicators 5-35
Program switching button (PROG) 5-35
Fast-forward button (FF) 5-35
Rewind button (REW) 5-36
Stop and eject button ( ) 5-36
Tape program sensor button (TPS) 5-36
Repeat button (RPT) 5-36
Dolby NR button ( ) 5-37
Auto metal sensor 5-37
Metal tape button (MTL) 5-37
COMPACT DISC PLAYER OPERATION 5-38

Downloaded from www.Manualslib.com manuals search engine

To play back a compact disc *5-38*
To select a song from its beginning *5-39*
Fast forwarding and fast reverse *5-39*
Repeat playback *5-40*
Random playback *5-40*
Scan *5-40*
To eject a disc from the player *5-40*
Precautions to observe when handling a compact disc (CD) ... *5-40*
CD CHANGER CONTROL
(If optional CD changer is connected) *5-42*
To start playback *5-43*
To select the desired disc *5-43*
To select a song from its beginning *5-43*
Fast forwarding and fast reverse *5-44*
Repeat playback *5-44*
Random playback *5-44*
Scan *5-44*
CLOCK FUNCTION *5-45*
Display mode *5-45*
Setting the time *5-46*
Installation of accessories ***5-46***

Downloaded from www.Manualslib.com manuals search engine

Radio

■ Antenna

▼ Pillar mounted antenna

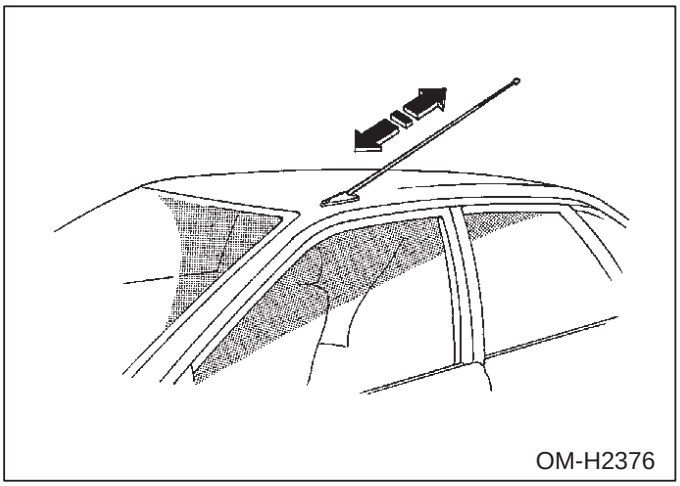

Pull the antenna out to extend it to its full length.

▼ Power antenna

⚠ CAUTION

Before tuning on the radio, make sure there are no persons near the antenna since personal injury could result if someone is struck by the antenna during its extension.

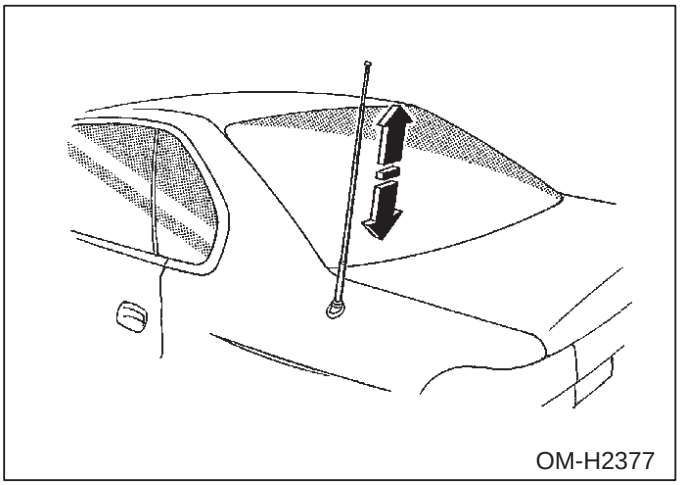

The power antenna automatically extends or retracts when the radio is turned on or off.

Downloaded from www.Manualslib.com manuals search engine

■ FM reception

Although FM is normally static free, reception can be affected by the surrounding area, atmospheric conditions, station strength and transmitter distance. Buildings or other obstructions may cause momentary static, flutter or station interference. If reception continues to be unsatisfactory, switch to a stronger station.

AM/FM stereo radio with cassette player (if equipped)

The radio will operate only when the ignition switch is in the “ACC” or “ON” positions.

RADIO OPERATION (for radio with weather band)

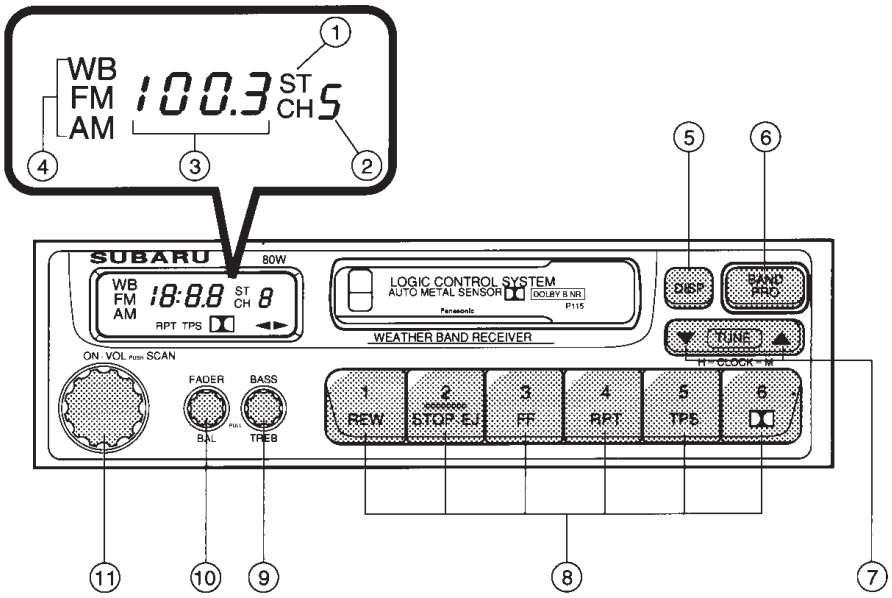

HB0065

① Stereo indicator
② Preset station number
③ Frequency
④ Band
⑤ DISP button
⑥ Band selection switch
⑦ Tuning button
⑧ Preset button
⑨ Bass and treble control knob
⑩ Fader and balance control knob
⑪ Power switch, volume control and SCAN button

– CONTINUED –

Downloaded from www.Manualslib.com manuals search engine

■ Weather band (WB)

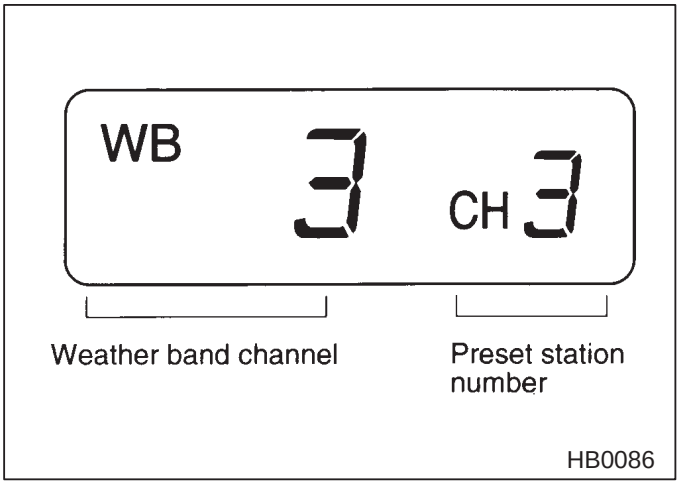

The radio can receive following seven stations of weather band (WB).

WB channel	Station
WB1 :	162.550 MHz
WB2 :	162.400 MHz
WB3 :	162.475 MHz
WB4 :	162.425 MHz
WB5 :	162.450 MHz
WB6 :	162.500 MHz
WB7 :	162.525 MHz

■ Power switch and volume control (ON · VOL)

The same knob is used for both power (on/off) and volume control. The radio is turned on and off by turning the knob clockwise or counterclockwise and the volume is controlled by turning the knob.

Downloaded from www.Manualslib.com manuals search engine

■ Fader and balance control (FADER and BAL)

The same knob is used for both fader control and balance control.

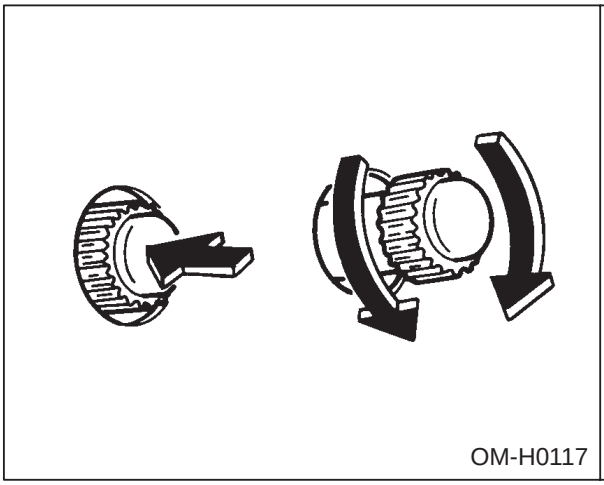

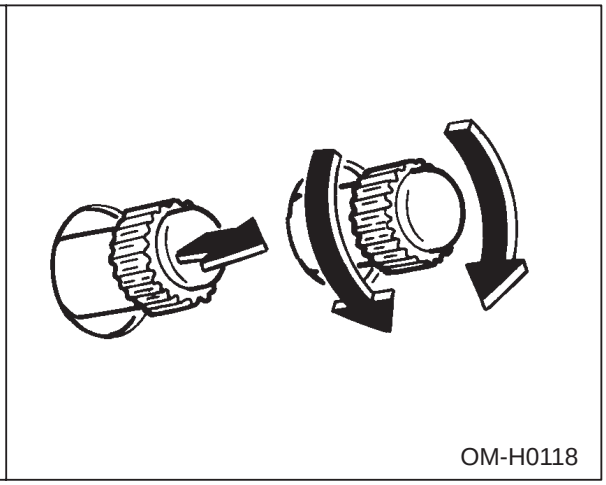

▼ Fader

The fader control adjusts the balance between the front and rear speakers.

Push the knob once to make it pop out. The balance is adjusted by turning the knob from left to right in this condition. A click while turning the knob indicates the center position. After making the desired adjustment, push the knob in again to store the setting.

▼ Balance

The balance control adjusts the balance between the left and right speakers.

Push the knob once to make it pop out, then pull the knob out until it stops. The balance is adjusted by turning the knob from left to right in this condition. A click while turning the knob indicates the center position. After adjusting the balance, push the knob in again to store the setting.

■ Bass and treble control (BASS and TREB)

Bass and treble control is done on same knob. Use that knob for the separate adjustment of low pitch and high pitch sounds.

▼ Bass

The bass control adjusts the level of low pitch sounds.

Push the knob once to make it pop out. The bass is adjusted by turning the knob from left to right in this condition. A click while turning the

– CONTINUED –

Downloaded from www.Manualslib.com manuals search engine

knob indicates the center position. After adjusting the bass, push the knob in again to store the setting.

▼ Treble

The treble control adjusts the level of high pitch sounds.
Push the knob once and it will pop out, then pull the knob out until it stops. The treble is adjusted by turning the knob from left to right in this condition. A click while turning the knob indicates the center position. After adjusting the treble, push the knob in again to store the setting.

■ Band selection switch (BAND)

Push the band selection switch to select either FM, AM or Weather Band (WB) reception. Each time this button is pressed, the band will change in the following order.

FM → AM → WB

The display indicates which is currently selected.

■ Stereo indicator

The stereo indicator “ST” will come on when an FM stereo broadcast is received.

■ Manual tuning (TUNE)

▼ Manual tuning for FM and AM

Press the tuning button marked “▲” to increase the tuning frequency and press the tuning button marked “ ▼ ” to decrease it. Each time the button is pressed, the frequency changes 10 KHz in the AM mode and 0.2 MHz in the FM mode. Constant pressure on the button causes a continuous change in the frequency.

▼ Manual tuning for WB

When WB mode is selected, press the tuning button marked “▲” to change the WB channel up and press the tuning button marked “ ▼ ” to change the WB channel down. Each time the button is pressed, the WB channel changes next channel. Constant pressure on the button causes a continuous change in the frequency.

Downloaded from www.Manualslib.com manuals search engine

■ Automatic tuning (SCAN)

Press the volume control knob to change the radio to the SCAN mode. In this mode, the radio scans through the radio band until a station is found. The radio will stop at the station for five seconds while displaying the frequency, after which scanning will continue until the entire band has been scanned from the low end to the high end. Press the volume control knob again to cancel the SCAN mode and to stop on any displayed frequency.

■ Selecting preset stations

Presetting a station with a preset button allows you to select that station in a single operation. Up to six AM, FM and WB stations each may be preset.

■ How to preset stations

1. Press the band selection switch to select either FM, AM or WB reception.
2. Press the volume control knob or tune the radio manually until the desired station frequency is displayed.
3. Press one of the preset buttons for at least two seconds to store the frequency. The frequency of the station will flash once on the display at this time. If the button is pressed for less than two seconds, the preceding selection will remain in memory.

When the volume control knob is pressed for automatic tuning, stations are scanned in the direction of low frequencies to high frequencies only. Automatic tuning may not function properly if the station reception is weakened by distance from the station or proximity to tall buildings and hills.

NOTE

If the connection between the radio and battery is broken for any reason such as vehicle maintenance or radio removal, all stations stored in the preset buttons are cleared. If this occurs, it is necessary to reset the preset buttons.

– CONTINUED –

Downloaded from www.Manualslib.com manuals search engine

RADIO OPERATION (for radio without weather band)

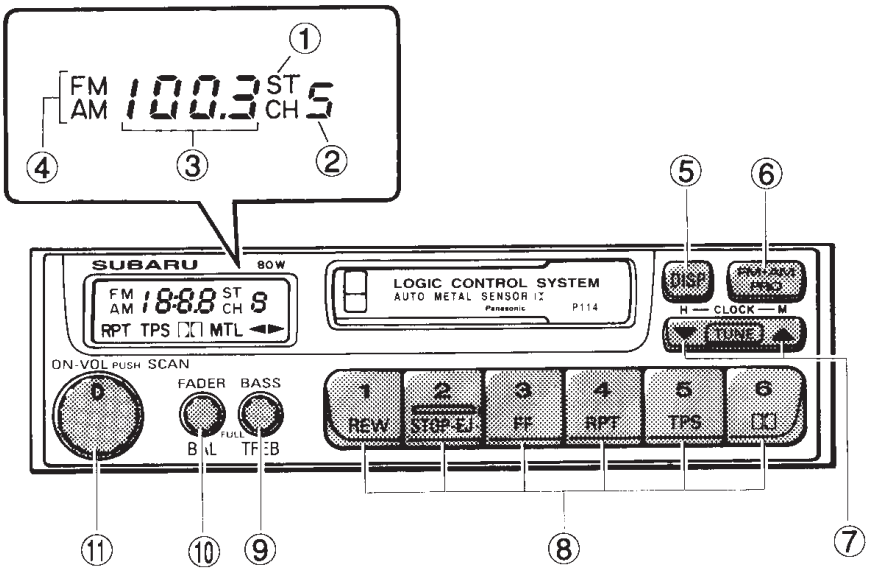

OM-H2432

① Stereo indicator
② Preset station number
③ Frequency
④ Band
⑤ DISP button
⑥ FM/AM selection switch
⑦ Tuning button
⑧ Preset button
⑨ Bass and treble control knob
⑩ Fader and balance control knob
⑪ Power switch, volume control and SCAN button

■ Power switch and volume control (ON·VOL)

The same knob is used for both power (on/off) and volume control. The radio is turned on and off by turning the knob clockwise or counterclockwise and the volume is controlled by turning the knob.

Downloaded from www.Manualslib.com manuals search engine

■ Fader and balance control (FADER and BAL)

The same knob is used for both fader control and balance control.

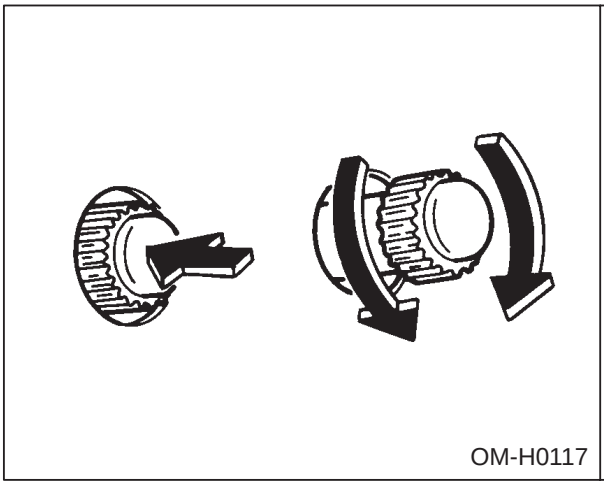

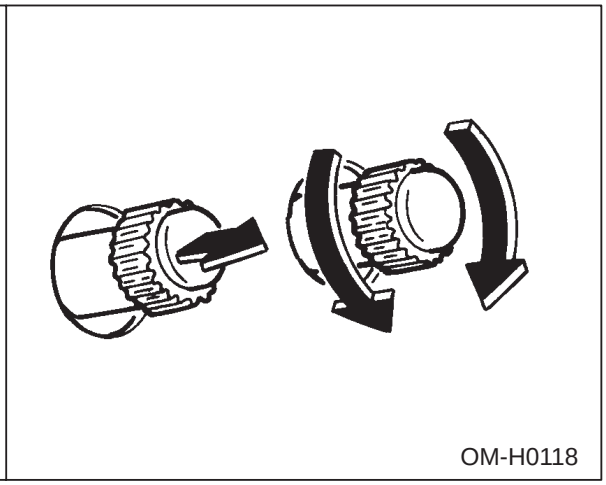

▼ Fader

The fader control adjusts the balance between the front and rear speakers.

Push the knob once to make it pop out. The balance is adjusted by turning the knob from left to right in this condition. A click while turning the knob indicates the center position. After making the desired adjustment, push the knob in again to store the setting.

▼ Balance

The balance control adjusts the balance between the left and right speakers.

Push the knob once to make it pop out, then pull the knob out until it stops. The balance is adjusted by turning the knob from left to right in this condition. A click while turning the knob indicates the center position. After adjusting the balance, push the knob in again to store the setting.

■ Bass and treble control (BASS and TREB)

Bass and treble control is done on same knob. Use that knob for the separate adjustment of low pitch and high pitch sounds.

– CONTINUED –

Downloaded from www.Manualslib.com manuals search engine

▼ Bass

The bass control adjusts the level of low pitch sounds.
Push the knob once to make it pop out. The bass is adjusted by turning the knob from left to right in this condition. A click while turning the knob indicates the center position. After adjusting the bass, push the knob in again to store the setting.

▼ Treble

The treble control adjusts the level of high pitch sounds.
Push the knob once and it will pop out, then pull the knob out until it stops. The treble is adjusted by turning the knob from left to right in this condition. A click while turning the knob indicates the center position. After adjusting the treble, push the knob in again to store the setting.

■ FM/AM selection switch (FM · AM)

Use this switch to select either FM or AM reception. The display indicates which is currently selected.

■ Stereo indicator

The stereo indicator “ST” will come on when an FM stereo broadcast is received.

■ Manual tuning (TUNE)

Press the tuning button marked “▲” to increase the tuning frequency and press the tuning button marked “ ▼ ” to decrease it. Each time the button is pressed, the frequency changes 10 KHz in the AM mode and 0.2 MHz in the FM mode. Constant pressure on the button causes a continuous change in the frequency.

■ Automatic tuning (SCAN)

Press the volume control knob to change the radio to the SCAN mode. In this mode, the radio scans through the radio band until a station is found. The radio will stop at the station for five seconds while displaying the frequency, after which scanning will continue until the entire band has been scanned from the low end to the high end. Press the volume

Downloaded from www.Manualslib.com manuals search engine

control knob again to cancel the SCAN mode and to stop on any displayed frequency.

■ Selecting preset stations

Presetting a station with a preset button allows you to select that station in a single operation. Up to six AM and FM stations each may be preset.

■ How to preset stations

1. Press the FM/AM selection switch to select either FM or AM reception.
2. Press the volume control knob or tune the radio manually until the desired station frequency is displayed.
3. Press one of the preset buttons for at least two seconds to store the frequency. The frequency of the station will flash once on the display at this time. If the button is pressed for less than two seconds, the preceding selection will remain in memory.

When the volume control knob is pressed for automatic tuning, stations are scanned in the direction of low frequencies to high frequencies only. Automatic tuning may not function properly if the station reception is weakened by distance from the station or proximity to tall buildings and hills.

NOTE

If the connection between the radio and battery is broken for any reason such as vehicle maintenance or radio removal, all stations stored in the preset buttons are cleared. If this occurs, it is necessary to reset the preset buttons.

– CONTINUED –

Downloaded from www.Manualslib.com manuals search engine

CASSETTE PLAYER OPERATION

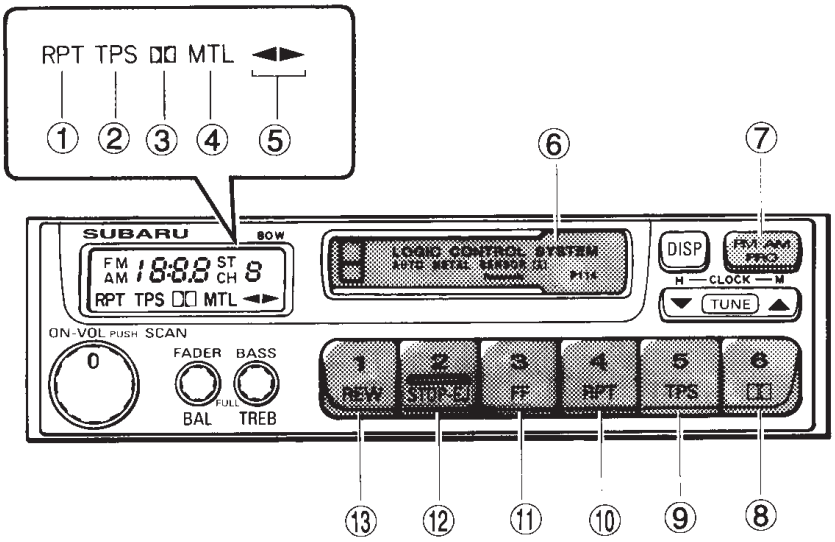

OM-H2433

① Repeat indicator
② TPS indicator
③ Dolby NR indicator
④ Metal tape indicator (if equipped)
⑤ Tape travel indicator
⑥ Cassette slot
⑦ Program switching button
⑧ Dolby NR button
⑨ Tape program sensor button
⑩ Repeat button
⑪ Fast forward button
⑫ Stop and eject button
⑬ Rewind button

■ Cassette slot

When a cassette is partially inserted, it is automatically drawn in and starts tape playback.

■ Tape travel indicators

These indicate the direction the cassette tape is moving.

▶ indicates that the top side of the cassette is being played back.

◀ indicates that the bottom side of the cassette is being played back.

Downloaded from www.Manualslib.com manuals search engine

■ Program switching button (PROG)

When the program switching button is pressed during playback, the tape travel indicators will switch and the player will begin playing back the opposite side of the tape. The same mechanism is automatically activated when the end of the tape is reached. This allows the opposite side of the tape to play, providing continuous playback.

■ Fast-forward button (FF)

To fast-forward the tape, press the “FF” button. To stop fast-forwarding, press the “STOP/EJ” button.

■ Rewind button (REW)

To rewind the tape, press the “REW” button. To stop rewinding, press the “STOP/EJ” button.

■ Stop and eject button (STOP/EJ)

When the “STOP/EJ” button is pressed, playback stops and the cassette tape is ejected.
The ejection function also operates when the ignition switch is turned off. Always make certain that you remove the cassette tape.

■ Tape program sensor button (TPS)

Press the “TPS” button during playback to return to the beginning of the current selection or to skip to the beginning of the next selection. To use this function, press the “TPS” button to turn on the “TPS” indicator. If the fast-forward button (FF) is then pressed, the player advances the tape to the beginning of the next selection and starts playing it. If the rewind button (REW) is pressed instead, the player rewinds the tape to the beginning of the current selection and starts replaying it. The “TPS” function may not operate properly under the following conditions:

- When the recording level is low.
- When there are long pauses in the middle of a selection.
- When the tape contains verbal material such as conversations.
- When the blanks between selections are shorter than five seconds.
- When there are no blanks between selections (live concerts, etc.).

– CONTINUED –

Downloaded from www.Manualslib.com manuals search engine

■ Repeat button (RPT)

Push the “RPT” button to repeat the piece of music being listened to. To use this function, push the “RPT” button while the piece you want to hear again is being played. “RPT” will be indicated on the display. When the selection ends, the cassette player automatically rewinds to the beginning of the piece and the selection begins again. To cancel the repeat function, push the “RPT” button again. Until the repeat function is cancelled, the same piece of music will be repeated indefinitely. The “RPT” function may not operate properly under the following conditions:

- When the recording level is low.
- When there are long pauses in the middle of a selection.
- When the tape contains verbal material such as conversations.
- When the blanks between selections are shorter than five seconds.
- When there are no blanks between selections (live concerts, etc).

■ Dolby NR button (DD)

Press the “DD” button when playing tapes recorded using the Dolby NR system*. The “DD” indicator will light up and high-frequency noise on the tape will be reduced for clearer sound reproduction.

* Noise reduction system manufactured under license from Dolby Laboratories Licensing Corporation. “Dolby” and double-D Symbol are trade marks of Dolby Laboratories Licensing Corporation.

■ Auto metal sensor

The cassette player automatically adjusts for metal or CrO_2 tape.

■ Metal tape indicator (MTL) (if equipped)

If metal or CrO_2 tape has been inserted into the cassette slot, “MTL” will be indicated on the display.

CLOCK FUNCTION

The radio has a built-in clock function that displays the time when the ignition switch is turned either to “ACC” or “ON”.

Downloaded from www.Manualslib.com manuals search engine

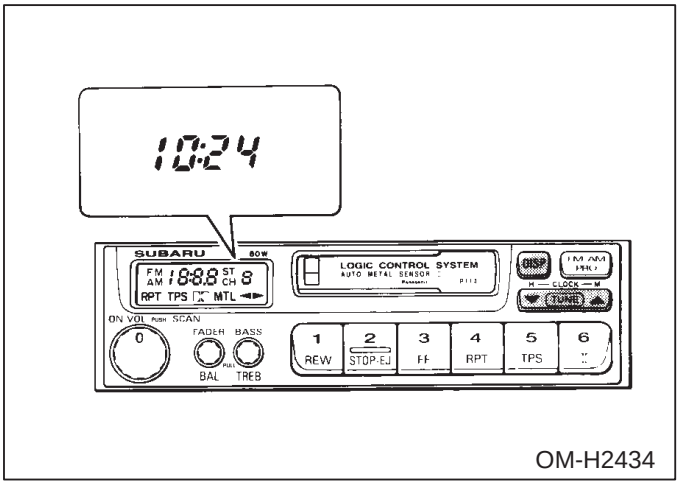

■ When turning on the radio

When the radio is switched on or the station is changed, the time display is replaced by the frequency display. However, after the frequency has been displayed for five seconds, it is replaced by the time display again.

If you wish to see the time while the frequency is being displayed, press the “DISP” button and the frequency display will be replaced with the time display.

■ Setting the time

To set the time, turn the ignition switch to “ACC” or “ON”. Press the “DISP” button and the “H” button together to advance the hours in one-hour increments. Press the “DISP” button and the “M” button together to advance the minutes in one-minute increments.

NOTE

If the connection between the radio and battery is broken for any reason such as vehicle maintenance or radio removal, the time setting will be cleared. If this occurs, it is necessary to reset the time.

Downloaded from www.Manualslib.com manuals search engine

AM/FM stereo radio with cassette player (if equipped)

The radio will operate only when the ignition switch is in the “ACC” or “ON” positions.

RADIO OPERATION

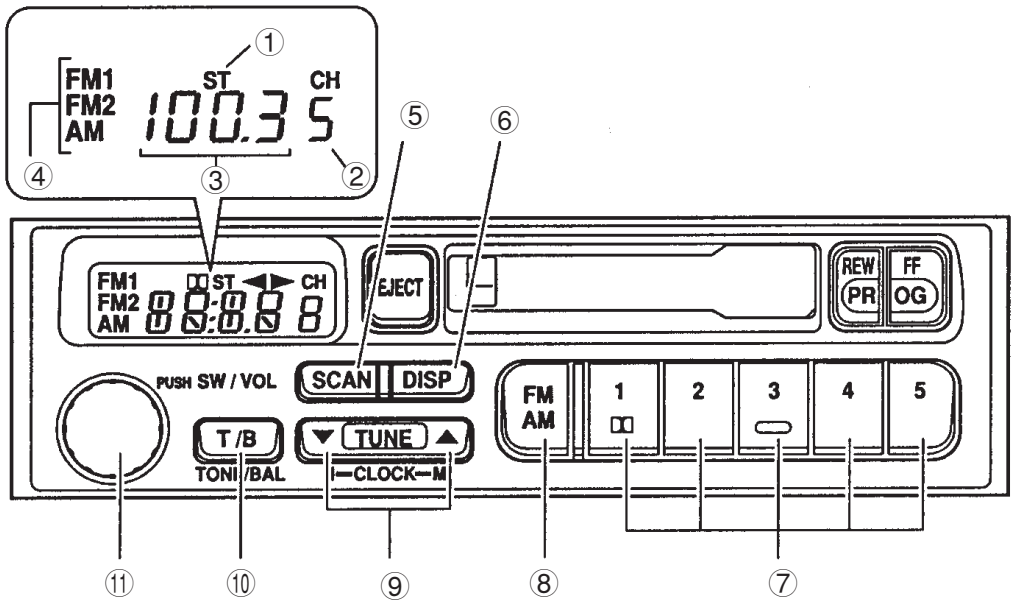

HB0318

① Stereo indicator
② Preset station number
③ Frequency
④ Band
⑤ SCAN button
⑥ DISP button
⑦ Preset button
⑧ FM/AM selection button
⑨ Tuning button
⑩ TONE/BAL selection button
⑪ Power switch, Volume control, Bass/treble control and Fader/balance control knob

Downloaded from www.Manualslib.com manuals search engine

■ Power switch and volume control (SW/VOL)

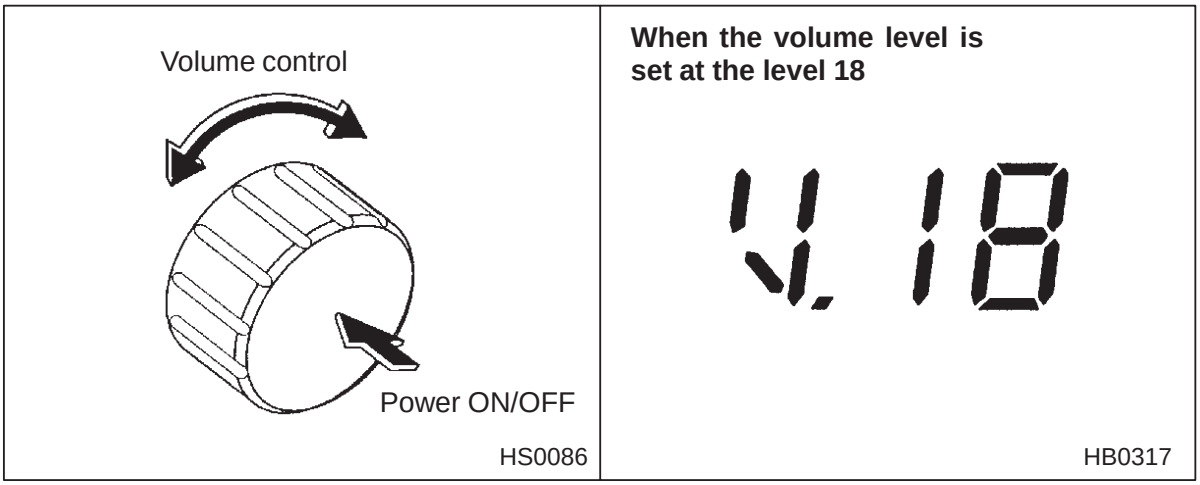

The same knob is used for both power (on/off) and volume control. The radio is turned on and off by pushing the knob and the volume is controlled by turning the knob.
The volume control has total of 41 volume levels (V: 0 for minimum, V: 40 for maximum).

■ Tone and balance control (TONE/BAL)

The volume control knob normally function as volume control. This knob become the controls for Bass, Treble, Fader or Balance when you select the relevant tone and balance control mode.
The “T/B” (Tone and balance) button is used for selecting the following control modes:

- Bass (low note) control
- Treble (high note) control
- Fader control (Volume balance control between front and rear speakers)
- Balance control (Volume balance control between right and left speakers)

To change control modes: Each pushing the “T/B” button changes control modes in the following sequence.

Bass (BAS) → Treble (TRE) → Fader (FAD) → Balance (BAL) → Off (OFF)

– CONTINUED –

Downloaded from www.Manualslib.com manuals search engine

▼ Bass control

Bass volume control indication	When the bass volume level is set at the level 5
BAS HB0344	BAS. 5 HB0319

Select the Bass control mode by pressing the “T/B” button. In the bass control mode, the display shows the indication as shown.
The bass control has total of 11 volume levels (BAS. –5 for minimum, BAS. 0 for middle, BAS. 5 for maximum). Choose desired bass volume level by turning the volume control knob. The control function returns to volume control mode after about 5 seconds.

▼ Treble control

Treble volume control indication	When the treble volume level is set at the level –5
TRE HB0346	TRE.- 5 HB0320

Select the Treble control mode by pressing the “T/B” button. In the treble control mode, the display shows the indication as shown.
The treble control has total of 11 volume levels (TRE. –5 for minimum, TRE. 0 for middle, TRE: 5 for maximum). Choose desired treble volume level by turning the volume control knob. The control function returns to volume control mode after about 5 seconds.

Downloaded from www.Manualslib.com manuals search engine

▼ Fader control

Fader control indication	When the fader setting is at the F9 (front maximum and rear minimum)
FAD HG0089	FAD.F 9 HB0321

Select the Fader control mode by pressing the “T/B” button. In the fader control mode, the display shows the indication as shown.
The fader control has total of 19 settings (FAD. F9 for front maximum and rear minimum, FAD. 0 for neutral, FAD. R9 for front minimum and rear maximum). Choose desired setting by turning the volume control knob. The control function returns to volume control mode after about 5 seconds.

▼ Balance control

Balance control indication	When the balance setting is at the L9 (left side maximum and right side minimum)
BAL HB0345	BAL.L 9 HB0322

Select the Balance control mode by pressing the “T/B” button. In the balance control mode, the display shows the indication as shown.
The balance control has total of 19 settings (BAL. L9 for left side max-

– CONTINUED –

Downloaded from www.Manualslib.com manuals search engine

imum and right side minimum, BAL. 0 for neutral, BAL. R9 for left side minimum and right side maximum). Choose desired setting by turning the volume control knob. The control function returns to volume control mode after about 5 seconds.

■ FM/AM selection button (FM AM)

Push the FM/AM selection button when the radio is on to select FM1, FM2 or AM reception. Each time this button is pressed, the band will change in the following order:

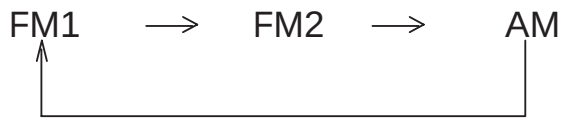

The display indicates which is currently selected.

■ Stereo indicator

The stereo indicator “ST” will come on when an FM stereo broadcast is received.

■ Manual tuning (TUNE)

Press the “TUNE” button marked “▲” to increase the tuning frequency and press the “TUNE” button marked “▼” to decrease it.
Each time the button is pressed, the frequency changes 10 KHz in the AM waveband and 0.2 MHz in the FM waveband.
Constant pressure on the button causes a continuous change in the frequency.

■ Automatic tuning (SCAN)

Press the “SCAN” button to change the radio to the SCAN mode. In this mode, the radio scans through the radio band until a station is found. The radio will stop at the station for five seconds while displaying the frequency, after which scanning will continue until the entire band has been scanned from the low end to the high end.
Press the “SCAN” button again to cancel the SCAN mode and to stop on any displayed frequency.

Downloaded from www.Manualslib.com manuals search engine

■ Selecting preset stations

Presetting a station with a preset button allows you to select that station in a single operation. Up to five AM, FM1 and FM2 stations each may be preset.

■ How to preset stations

1. Press the FM/AM selection button to select either FM1, FM2 or AM reception.
2. Press the “SCAN” button or tune the radio manually until the desired station frequency is displayed.
3. Press one of the preset buttons for **at least two seconds** to store the frequency. The frequency of the station will flash once on the display at this time. If the button is pressed for less than two seconds, the preceding selection will remain in memory.

When the “SCAN” button is pressed for automatic tuning, stations are scanned in the direction of low frequencies to high frequencies only.
Automatic tuning may not function properly if the station reception is weakened by distance from the station or proximity to tall buildings and hills.

NOTE

If the connection between the radio and battery is broken for any reason such as vehicle maintenance or radio removal, all stations stored in the preset buttons are cleared. If this occurs, it is necessary to reset the preset buttons.

– CONTINUED –

Downloaded from www.Manualslib.com manuals search engine

CASSETTE PLAYER OPERATION

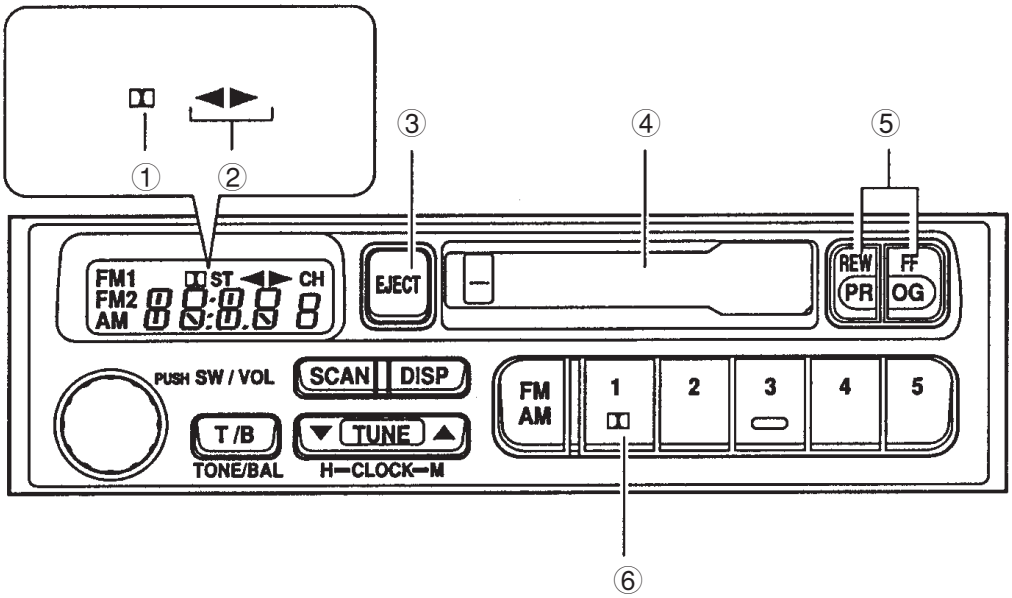

HB0323

① Dolby NR indicator
② Tape travel indicator
③ Eject button
④ Cassette slot
⑤ Program, Fast forward and rewind button
⑥ Dolby NR button

NOTE

- Only use good quality cassettes (cassettes longer than C-90 are not recommended).
- Put cassettes back in their boxes immediately after use to protect them from dust and dirt and to prevent the tape from unwinding.
- Never expose cassettes to heat, direct sunlight or moisture.
- Clean the tape head (once or twice a month) using a **wet-type cleaning cassette**.

■ Cassette slot

Insert a cassette with the exposed tape side facing to the right. After inserting, playback starts.

■ Tape travel indicators

These indicate the direction the cassette tape is moving.

▶ indicates that the top side of the cassette is being played back.

◀ indicates that the bottom side of the cassette is being played back.

Downloaded from www.Manualslib.com manuals search engine

■ Program switching buttons (PROG)

When the program switching buttons (“REW” and “FF” buttons) are pressed at the same time during playback, the tape travel indicators will switch and the player will begin playing back the opposite side of the tape. The same mechanism is automatically activated when the end of the tape is reached. This allows the opposite side of the tape to play, providing continuous playback.

■ Fast-forward button (FF)

To fast-forward the tape, press the “FF” button. To stop fast-forwarding, press the “REW” button.

■ Rewind button (REW)

To rewind the tape, press the “REW” button. To stop rewinding, press the “FF” button.

■ Stop and eject button (EJECT)

When “EJECT” button is pressed, play back stops and the cassette tape is ejected.

Before the ignition switch turn to the “OFF” position, eject the tape from the player. Always make certain that you remove the cassette tape.

■ Dolby NR button (DD)

Press “DD” button when playing tapes recorded using the Dolby NR system*. The “DD” indicator will light up and high-frequency noise on the tape will be reduced for clearer sound reproduction.

* Noise reduction system manufactured under license from Dolby Laboratories Licensing Corporation. “Dolby” and double-D Symbol are trade marks of Dolby Laboratories Licensing Corporation.

– CONTINUED –

Downloaded from www.Manualslib.com manuals search engine

CLOCK FUNCTION

The radio has a built-in clock function that displays the time when the ignition switch is turned either to “ACC” or “ON”.

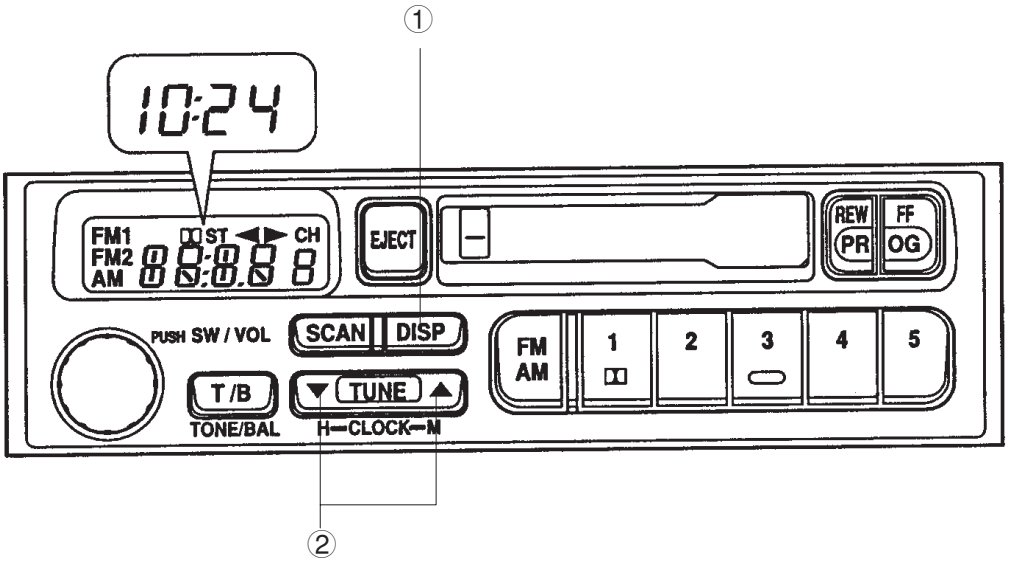

HB0324

① DISP button
② Tuning button

■ When turning on the radio

When the radio is switched on or the station is changed, the time display is replaced by the frequency display. However, after the frequency has been displayed for five seconds, it is replaced by the time display again.

If you wish to see the time while the frequency is being displayed, press the “DISP” button and the frequency display will be replaced with the time display.

■ Setting the time

1. Turn the ignition switch to “ACC” or “ON”.
2. **To adjust hour:** Press the “DISP” button and the “TUNE” button indicated with “▼” together to advance the hours in one-hour increments. Keeping the buttons pressed advances the hours quickly.
3. **To adjust minute:** Press the ”DISP” button and the “TUNE” button indicated “▲” together to advance the minutes in one-minute increments. Keeping the buttons pressed advances the minutes quickly.

Downloaded from www.Manualslib.com manuals search engine

NOTE

If the connection between the radio and battery is broken for any reason such as vehicle maintenance or radio removal, the time setting will be cleared. If this occurs, it is necessary to reset the time.

AM/FM/WB stereo radio with cassette and compact disc player (if equipped)

The radio will operate only when the ignition switch is in the “ACC” or “ON” positions.

RADIO OPERATION

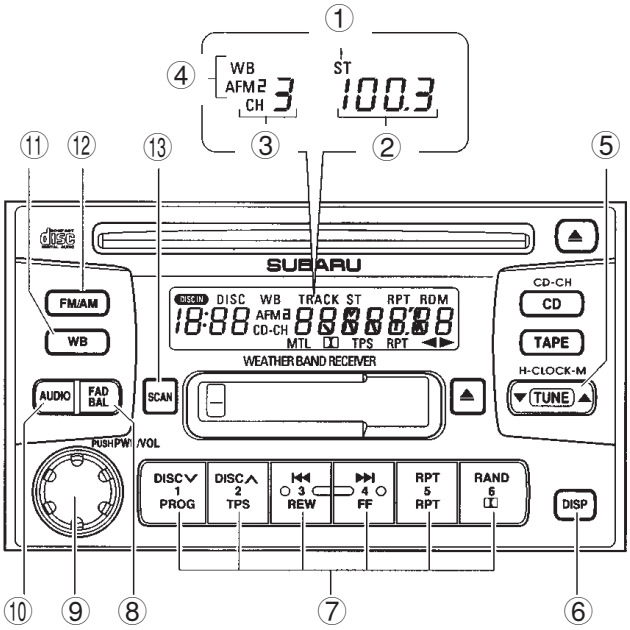

HB5000BB

① Stereo indicator
② Frequency
③ Preset station number
④ Wave band
⑤ Tuning button
⑥ DISP button
⑦ Preset button
⑧ Fader/Balance selection button
⑨ Power switch, Volume control, Bass/Middle/Treble control and Fader/Balance control knob
⑩ AUDIO (audio mode) button
⑪ WB (weather band) button
⑫ FM/AM selection button
⑬ SCAN button

– CONTINUED –

Downloaded from www.Manualslib.com manuals search engine

■ Power switch and volume control (PWR/VOL)

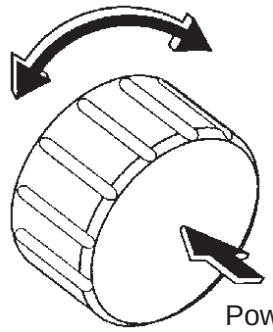

HS0086

When the volume level is set at the level 18

HB0325

The same knob is used for both power (on/off) and volume control. The radio is turned on and off by pushing the knob and the volume is controlled by turning the knob.
The volume control has total of 41 volume levels (VOL 0 for minimum, VOL 40 for maximum).

■ Tone control (AUDIO)

The volume control knob normally function as volume control. This knob become the controls for Bass, Middle or Treble when you select the relevant tone control mode.
The “AUDIO” (audio mode) button is used for selecting the following control modes:

- Bass (low note) control
- Middle (middle note) control
- Treble (high note) control

To change control modes: Each brief pushing the “AUDIO” button changes control modes in the following sequence starting from bass control mode. (When the radio is powered on, control mode is in the volume control.)

Bass (BAS) → Middle (MId) → Treble (TRE) → Volume (VOL)

Downloaded from www.Manualslib.com manuals search engine

▼ Bass control

Bass volume control indication	When the bass volume level is set at the level 5
HB0347	HB0327

Select the Bass control mode by pressing the “AUDIO” button. In the bass control mode, the display shows the indication as shown.
The bass control has total of 11 volume levels (BAS. –5 for minimum, BAS. 0 for middle, BAS. 5 for maximum). Choose desired bass volume level by turning the volume control knob. The control function returns to volume control mode after about 5 seconds.

▼ Middle note control

Middle note volume control indication	When the middle note volume level is set at the level –3
HB0329	HB0330

Select the Middle note control mode by pressing the “AUDIO” button. In the middle note control mode, the display shows the indication as shown.
The middle note control has total of 11 volume levels (MId. –5 for minimum, MId. 0 for middle, MId. 5 for maximum). Choose desired middle

– CONTINUED –

Downloaded from www.Manualslib.com manuals search engine

note volume level by turning the volume control knob. The control function returns to volume control mode after about 5 seconds.

▼ Treble control

Treble volume control indication	When the treble volume level is set at the level –5
TRE HB0348	TRE-5 HB0328

Select the Treble control mode by pressing the “AUDIO” button. In the treble control mode, the display shows the indication as shown.
The treble control has total of 11 volume levels (TRE. –5 for minimum, TRE. 0 for middle, TRE. 5 for maximum). Choose desired treble volume level by turning the volume control knob. The control function returns to volume control mode after about 5 seconds.

■ Fader and balance control (FAD/BAL)

The volume control knob normally function as volume control. This knob become the controls for Fader or Balance when you select the relevant fader and balance control mode.
The “FAD/BAL” (fader and balance) button is used for selecting the following control modes:

- Fader control (Volume balance control between front and rear speakers)
- Balance control (Volume balance control between right and left speakers)

To change control modes: Each brief pushing the “FAD/BAL” button changes control modes in the following sequence starting from fader control mode. (When the radio is powered on, control mode is in the volume control.)

Downloaded from www.Manualslib.com manuals search engine

Fader (FAd) → Balance (BAL) → Volume (VOL)

▼ Fader control

Fader control indication	When the fader setting is at the F9 (front maximum and rear minimum)
FAd HB0368	FAd.F9 HB0331

Select the Fader control mode by pressing the “FAD/BAL” button. In the fader control mode, the display shows the indication as shown.
The fader control has total of 19 settings (FAd. F9 for front maximum and rear minimum, FAd.0 for neutral, FAd. R9 for front minimum and rear maximum). Choose desired setting by turning the volume control knob. The control function returns to volume control mode after about 5 seconds.

▼ Balance control

Balance control indication	When the balance setting is at the L9 (left side maximum and right side minimum)
BAL HB0349	BAL.L9 HB0332

– CONTINUED –

Downloaded from www.Manualslib.com manuals search engine

Select the Balance control mode by pressing the “FAD/BAL” button. In the balance control mode, the display shows the indication as shown.
The balance control has total of 19 settings (BAL. L9 for left side maximum and right side minimum, BAL. 0 for neutral, BAL. R9 for left side minimum and right side maximum). Choose desired setting by turning the volume control knob. The control function returns to volume control mode after about 5 seconds.

■ FM/AM selection button (FM/AM)

Push the “FM/AM” button when the radio is off to turn on the radio.
Push the “FM/AM” button when the radio is on to select FM1, FM2 or AM reception. Each time this button is pressed, the band will change in the following order:

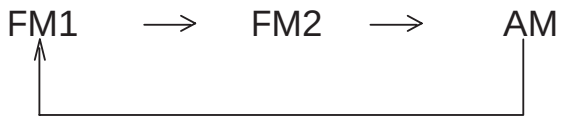

The display indicates which is currently selected.

■ Stereo indicator

The stereo indicator “ST” will come on when an FM stereo broadcast is received.

■ Weather band button (WB)

Push the “WB” button when the radio is off to turn on the radio in the weather band.
Press the “WB” button when the radio is on to select the weather band.
The weather band indicator “WB” will come on when the weather band is selected.

■ Manual tuning (TUNE)

▼ Manual tuning for AM and FM waveband

Push the tuning button marked “▲” to increase the tuning frequency and press the tuning button marked “▼” to decrease it.

Downloaded from www.Manualslib.com manuals search engine

Each time the button is pressed, the frequency changes 10 KHz in the AM waveband and 0.2 MHz in the FM waveband.
Constant pressure on the button causes a continuous change in the frequency.

▼ Manual tuning for weather band

When weather band mode is selected, press the tuning button marked "▲" to change the WB channel up and press the tuning button marked "▼" to change the WB channel down. Each time the button is pressed, the WB channel changes next channel. Constant pressure on the button causes a continuous change in the frequency.

■ Automatic tuning (SCAN)

Press the "SCAN" button to change the radio to the SCAN mode. In this mode, the radio scans through the radio band until a station is found. The radio will stop at the station for five seconds while displaying the frequency, after which scanning will continue until the entire band has been scanned from the low end to the high end.
Press the "SCAN" button again to cancel the SCAN mode and to stop on any displayed frequency.

■ Selecting preset stations

Presetting a station with a preset button allows you to select that station in a single operation. Up to six AM, FM1, FM2 and WB stations each may be preset.

■ How to preset stations

1. Press the "FM/AM" selection button to select either AM, FM1 or FM2 reception.

OR

Press the "WB" button to select the weather band.

2. Press the "SCAN" button or tune the radio manually until the desired station frequency is displayed.
3. Press one of the preset buttons for **at least 1.5 seconds** to store the frequency. The frequency of the station will flash once on the display at this time. If the button is pressed for less than 1.5 seconds, the preceding selection will remain in memory.

– CONTINUED –

Downloaded from www.Manualslib.com manuals search engine

When the “SCAN” button is pressed for automatic tuning, stations are scanned in the direction of low frequencies to high frequencies only. Automatic tuning may not function properly if the station reception is weakened by distance from the station or proximity to tall buildings and hills.

NOTE

If the connection between the radio and battery is broken for any reason such as vehicle maintenance or radio removal, all stations stored in the preset buttons are cleared. If this occurs, it is necessary to reset the preset buttons.

CASSETTE PLAYER OPERATION

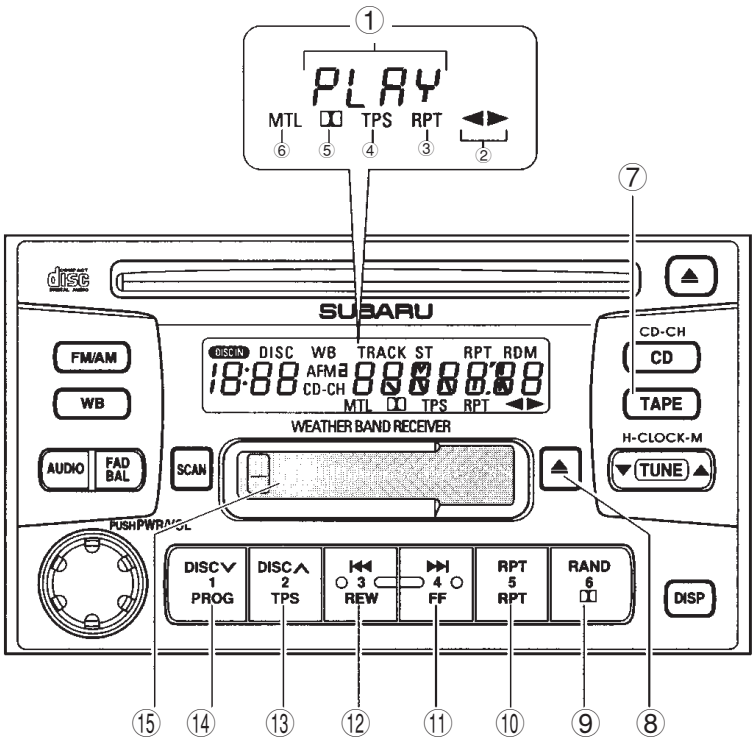

HB5000CB

① Cassette player operation indicator
② Tape travel indicator
③ Repeat indicator
④ TPS indicator
⑤ Dolby NR indicator
⑥ Metal tape indicator
⑦ TAPE (cassette player selection) button
⑧ Eject button
⑨ Dolby NR button
⑩ Repeat button
⑪ Fast forward button
⑫ Rewind button
⑬ TPS button
⑭ Program switching button
⑮ Cassette slot

Downloaded from www.Manualslib.com manuals search engine

NOTE

- Only use good quality cassettes (cassettes longer than C-90 are not recommended).
- Put cassettes back in their boxes immediately after use to protect them from dust and dirt and to prevent the tape from unwinding.
- Never expose cassettes to heat, direct sunlight or moisture.
- Clean the tape head (once or twice a month) using a **wet-type cleaning cassette**.

■ To play back a cassette tape

▼ When cassette tape is not in the player

When a cassette is partially inserted, it is automatically drawn in and starts tape playback.

▼ When cassette tape is in the player

When the “TAPE” button is pressed, the display will indicate “PLAY” and the player will start playback.

■ Tape travel indicators

These indicate the direction the cassette tape is moving.

▶ indicates that the top side of the cassette is being played back.

◀ indicates that the bottom side of the cassette is being played back.

■ Program switching button (PROG)

When the program switching button “PROG” is pressed during playback, the tape travel indicators will switch and the player will begin playing back the opposite side of the tape. The same mechanism is automatically activated when the end of the tape is reached. This allows the opposite side of the tape to play, providing continuous playback.

■ Fast-forward button (FF)

To fast-forward the tape, press the “FF” button. The display will indicate “FF”. To stop fast-forwarding, press the “FF” or “TAPE” button.

– CONTINUED –

Downloaded from www.Manualslib.com manuals search engine

■ Rewind button (REW)

To rewind the tape, press the “REW” button. The display will indicate “REW”. To stop rewinding, press the “REW” or “TAPE” button.

■ Stop and eject button (⏏)

When “⏏” button is pressed, play back stops and the cassette tape is ejected.
The ejection function also operates when the ignition switch is turned off. Always make certain that you remove the cassette tape.

■ Tape program sensor button (TPS)

▼ Blank skip

When the “TPS” button is pressed, the “TPS” indicator will come on and the player will automatically skip any blank portion of 15 second or more and play the next program, even if it is on the other side. To cancel blank skip mode, press the “TPS” button again.

▼ Blank search

Press “TPS” button during playback to return to the beginning of the current selection or to skip to the beginning of the next selection. To use this function, press the “TPS” button to turn on the “TPS” indicator. If the fast-forward button “FF” is then pressed, the player advances the tape to the beginning of the next selection and starts playing it. If the rewind button “REW” is pressed instead, the player rewinds the tape to the beginning of the current selection and starts replaying it. The “TPS” function may not operate properly under the following conditions:

- When the recording level is low.
- When there are long pauses in the middle of a selection.
- When the tape contains verbal material such as conversations.
- When the blanks between selections are shorter than five seconds.
- When there are no blanks between selections (live concerts, etc.).

■ Repeat button (RPT)

Push the “RPT” button to repeat the piece of music being listened to. To use this function, push the “RPT” button while the piece you want to hear

Downloaded from www.Manualslib.com manuals search engine

again is being played. “RPT” will be indicated on the display. When the selection ends, the cassette player automatically rewinds to the beginning of the piece and the selection begins again. To cancel the repeat function, push the “RPT” button again. Until the repeat function is cancelled, the same piece of music will be repeated indefinitely. The “RPT” function may not operate properly under the following conditions:

- When the recording level is low.
- When there are long pauses in the middle of a selection.
- When the tape contains verbal material such as conversations.
- When the blanks between selections are shorter than five seconds.
- When there are no blanks between selections (live concerts, etc).

■ Dolby NR button (DD)

Press “DD” button when playing tapes recorded using the Dolby NR system*. The “DD” indicator will light up and high-frequency noise on the tape will be reduced for clearer sound reproduction.

* Noise reduction system manufactured under license from Dolby Laboratories Licensing Corporation. “Dolby” and double-D Symbol are trade marks of Dolby Laboratories Licensing Corporation.

■ Auto metal sensor

The cassette player automatically adjusts for metal or CrO_2 tape.

■ Metal tape button (MTL)

If metal or CrO_2 tape has been inserted into the cassette slot, “MTL” will be indicated on the display.

– CONTINUED –

Downloaded from www.Manualslib.com manuals search engine

COMPACT DISC PLAYER OPERATION

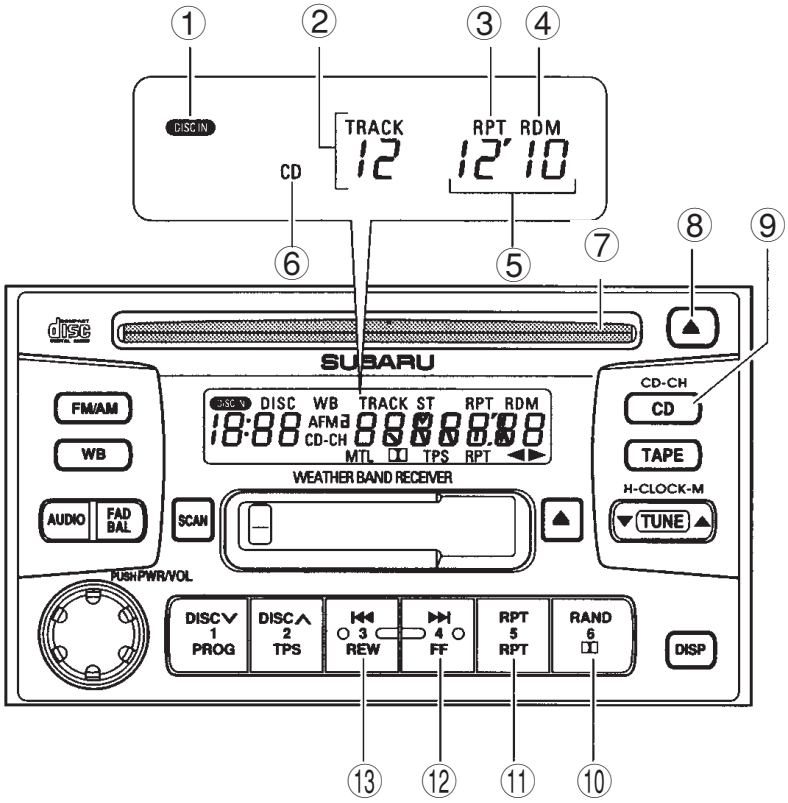

HB5000DB

① DISC indicator
② Track number
③ Repeat indicator
④ Random indicator
⑤ Time elapsed
⑥ CD player made indicator
⑦ Disc slot
⑧ Eject button
⑨ CD (CD player selection) button
⑩ Random button
⑪ Repeat button
⑫ Fast forward and track up button
⑬ Fast reverse and track down button

■ To play back a compact disc

▼ When CD is not in the player

Hold a disc with a finger in the center hole while gripping the edge of the disc, then insert it in to the slot (with the label side up) and the player will automatically pull the disc into position.

After inserting, the DISC indicator " DISC IN " and CD player mode indicator "CD" will come on and playback start.

Downloaded from www.Manualslib.com manuals search engine

NOTE

- Make sure to always insert a disc with the label side up. If a disc is inserted with the label side down, it might be ejected or the player might shut off.
- After the last song finishes, the disc will automatically return to track 1 (the first song on the disc) and will automatically play back.

▼ When CD is in the player

When the “CD” button is pressed, the CD player mode indicator “CD” will come on and the player will start playback.

NOTE

After the last song finishes, the disc will automatically return to track 1 (the first song on the disc) and will automatically play back.

■ To select a song from its beginning

▼ Forward direction

Briefly press the “▶▶▮” button to skip to the beginning of the next track. Each time the button is pressed, the indicated track number will increase.

▼ Backward direction

Briefly press the “▮◀◀” button to skip to the beginning of the current track. Each time the button is pressed, the indicated truck number will decrease.

■ Fast forwarding and fast reverse

▼ Fast forward

Press the “▶▶▮” button continuously for more than 0.5 second to fast forward the disc.
Release the button to stop fast forwarding.

▼ Fast reverse

Press the “▮◀◀” button continuously for more than 0.5 second to fast reverse the disc.
Release the button to stop fast reverse.

– CONTINUED –

Downloaded from www.Manualslib.com manuals search engine

■ Repeat playback

Press the “RPT” button while a song is playing to play the song repeatedly. The “RPT” indicator will come on and the song will be played continuously. To cancel the repeat mode, press the button again. Then the “RPT” indicator goes out, and normal playback mode is restored.

■ Random playback

Press the “RDM” button while a disc is being played back to play all songs on the disc in a random order. The “RDM” indicator will come on and all songs on the disc will be played in a random order.
To cancel the random mode, press the button again. Then the “RDM” indicator goes out, and normal playback mode is restored.

■ Scan

When the “SCAN” button is pressed while the disc is being played back, you can hear the first 10 seconds of each track to seach the desired program. To continue listening to the program, press the “SCAN” button again. After all tracks on the disc has been scanned, normal playback mode is restored.

■ To eject a disc from the player

When a disc is being played back or when a disc is in the player, press the eject button “ ⏏ ”. The disc will be ejected.
The disc may be removed even when the ignition switch is in the “LOCK” position.

NOTE

Avoid driving the vehicle with a CD sticking out, because vibration might make it fail out.

■ Precautions to observe when handling a compact disc (CD)

- To remove a disc from the case, press the center of the case and hold both edges of the disc. If the disc surface is touched directly, contamination could cause poor tone quality. Do not touch the disc surface.
- Use a clean disc whenever possible. If there are deposits, wipe the disc surface from the center outward with a dry, soft cloth. Be sure not to

Downloaded from www.Manualslib.com manuals search engine

use a hard cloth, thinner, benzene, alcohol, etc.

- Never use a badly damaged, deformed or cracked disc. Malfunctions or problems might result.
- A disc is vulnerable to heat. Never keep it either in places exposed to direct sunlight or near heaters.

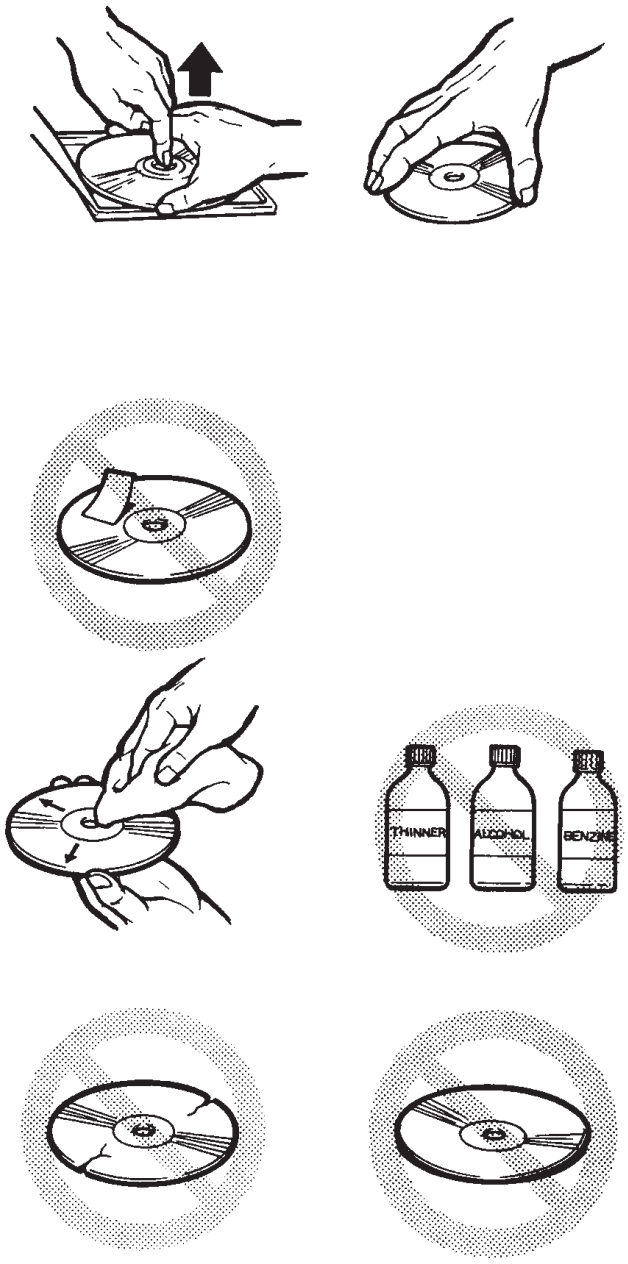

OM-4747

– CONTINUED –

Downloaded from www.Manualslib.com manuals search engine

CD CHANGER CONTROL (If optional CD changer is connected)

An optional CD changer can be connected to this audio unit. See your SUBARU dealer for more information.

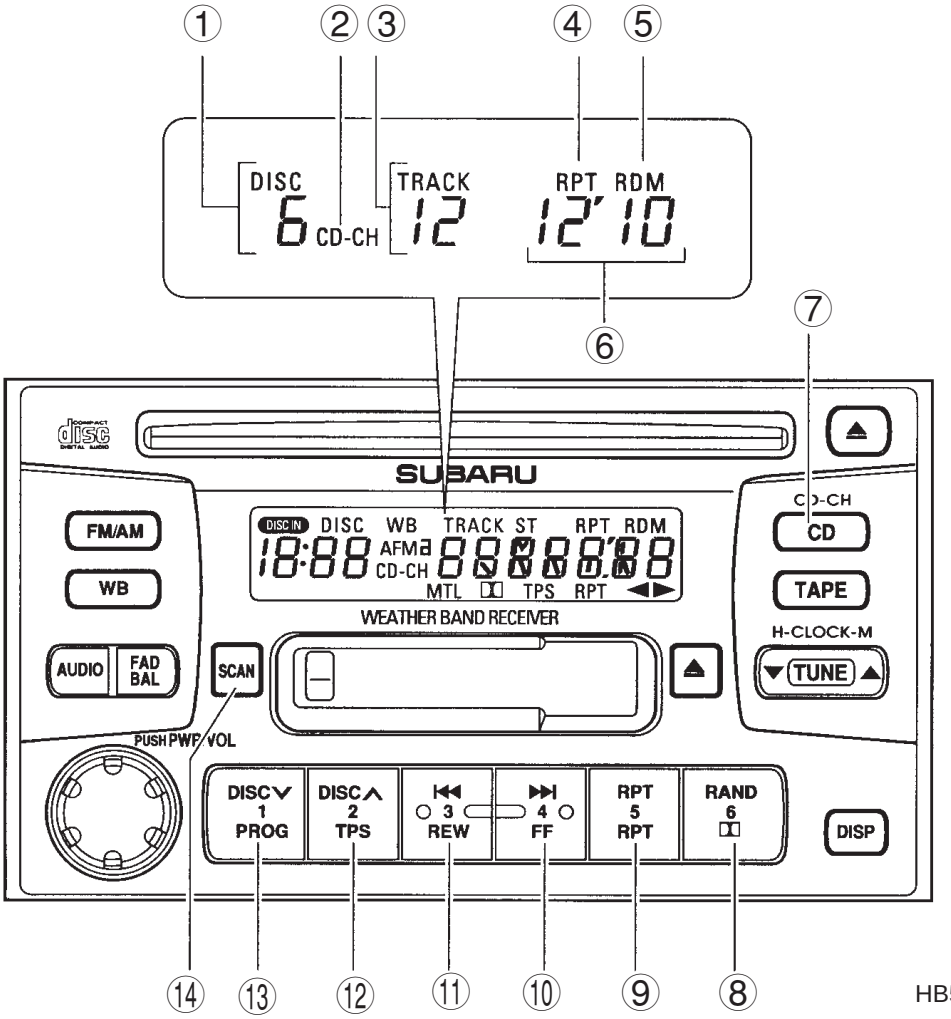

HB5000EB

① Disc number
② CD-CH (CD changer mode) indicator
③ Track number
④ Repeat indicator
⑤ Random indicator
⑥ Time elapsed
⑦ CD-CH (CD changer mode selection) button
⑧ Random button
⑨ Repeat button
⑩ Fast forward and track up button
⑪ Fast reverse and track down button
⑫ Disc up button
⑬ Disc down button
⑭ SCAN button

Downloaded from www.Manualslib.com manuals search engine

■ To start playback

When the “CD-CH” button is pressed, the CD changer mode indicator “CD-CH” will come on and the CD changer will start playback. The display shows the current disc number, truck number and the elapsed time during playback.

NOTE

- If a disc is in the player, the “CD-CH” button (“CD” button) is used to change from CD player operation to CD changer operation. Each time the “CD-CH” button is pressed, the operating mode will change alternately starting from CD player mode.
- At the end of the disc, playback automatically continues with the next disc.
- After playback on the last disc finishes, the disc will automatically return to the first disc and will automatically play back.
- If you have loaded fewer than 6 discs, any missing disc is automatically skipped.

■ To select the desired disc

Press either the disc up button “DISC ∧” or disc down button “DISC ∨” to select the desired disc. Each time the “DISC ∧” button is pressed, the indicated disc number will increase. Each time the “DISC ∨” button is pressed, the indicated disc number will decrease. Constant pressure on these buttons causes a continuous change in the disc number.

■ To select a song from its beginning

▼ Forward direction

Briefly press the “▶▶▮” button to skip to the beginning of the next track. Each time the button is pressed, the indicated track number will increase.

▼ Backward direction

Briefly press the “▮◀◀” button to skip to the beginning of the current track. Each time the button is pressed, the indicated track number will decrease.

– CONTINUED –

Downloaded from www.Manualslib.com manuals search engine

■ Fast forwarding and fast reverse

▼ Fast forward

Press the "▶▶▮" button continuously for more than 0.5 second to fast forward the disc.
Release the button to stop fast forwarding.
If you continue fast forwarding to the end of the disc, the CD changer will automatically stop fast forwarding and start playback beginning with the first track on the current disc.

▼ Fast reverse

Press the "▮◀◀" button continuously for more than 0.5 second to fast reverse the disc.
Release the button to stop fast reverse.
If you continue fast reverse to the beginning of the disc, the CD changer will automatically stop fast reverse and start playback beginning with the first track on the current disc.

■ Repeat playback

Press the "RPT" button while a song is playing to play the song repeatedly. The "RPT" indicator will come on and the song will be played continuously. To cancel the repeat mode, press the button again. Then the "RPT" indicator goes out, and normal playback mode is restored.

■ Random playback

Press the "RDM" button while a disc is being played back to play all songs on the disc in a random order. The "RDM" indicator will come on and all songs on the disc will be played in a random order.
To cancel the random mode, press the button again. Then the "RDM" indicator goes out, and normal playback mode is restored.

■ Scan

When the "SCAN" button is pressed while the disc is being played back, you can hear the first 10 seconds of each track to search the desired program. To continue listening to the program, press the "SCAN" button again. After all tracks on the disc has been scanned, normal playback mode is restored.

Downloaded from www.Manualslib.com manuals search engine

CLOCK FUNCTION

The radio has a built-in clock function that displays the time when the ignition switch is tuned either to “ACC” or “ON”.

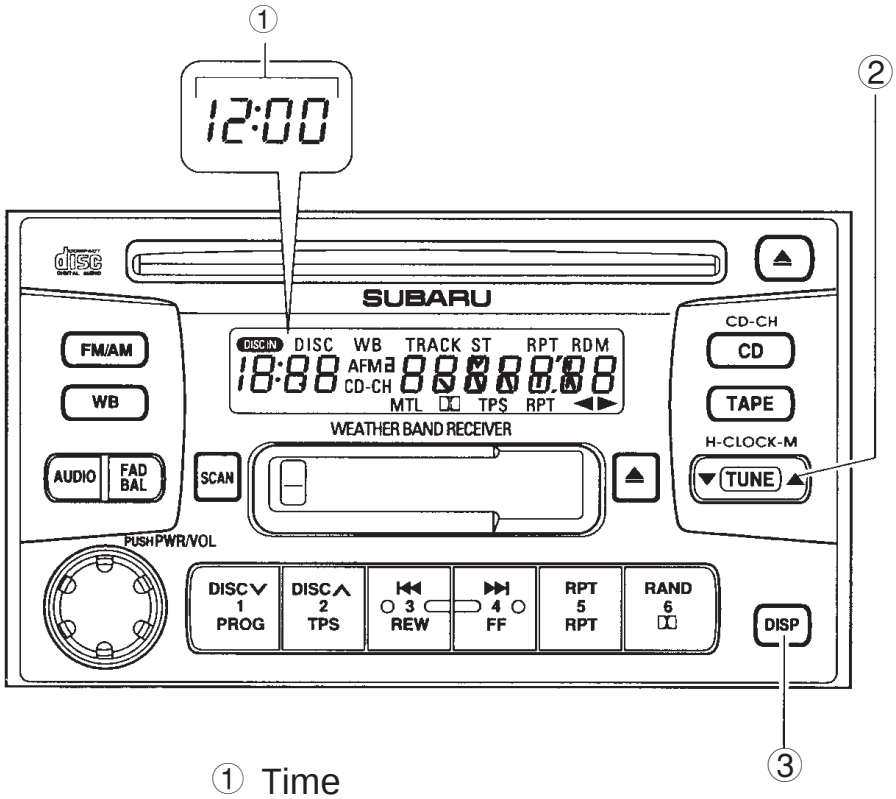

① Time
② CLOCK button
③ DISP button

HB5000FB

■ Display mode

You can select either the time display mode or function display mode by pressing the “DISP” button continuously for more than 0.5 second.

▼ Time display mode

When the time display mode is selected, the time display takes priority of the function display. The time is shown on the display whenever the ignition switch is “ACC” or “ON” position.

When the CD changer is switched on or the disc in the CD changer is changed during the time display mode, the time display is replaced by the disc number display. However, after the disc number has been displayed for five seconds, it is replaced by the time display again.

– CONTINUED –

Downloaded from www.Manualslib.com manuals search engine

▼ **Function display mode**

When the function display mode is selected, the time is not shown on the display. The display indicates the current function only.

■ **Setting the time**

1. Turn the ignition switch to “ACC” or “ON”.
2. Select the time display mode by pressing the “DISP” button for more than 0.5 second.
3. **To adjust hour:** Press the “DISP” button and the “H” button together to advance the hours in one-hour increments. Keeping the buttons pressed advances the hours quickly.
4. **To adjust minute:** Press the “DISP” button and the “M” button together to advance the minutes in one-minute increments. Keeping the buttons pressed advances the minutes quickly.

NOTE

If the connection between the radio and battery is broken for any reason such as vehicle maintenance or radio removal, the time setting will be cleared. If this occurs, it is necessary to reset the time.

Installation of accessories

Always consult your SUBARU dealer before installing a citizen band radio or other transmitting device in your vehicle. Such devices may cause the electronic control system to malfunction if they are incorrectly installed or if they are not suited for the vehicle.

Downloaded from www.Manualslib.com manuals search engine

Interior equipment

Sun visors 6-2
- Vanity mirror (if equipped) 6-2
- Vanity mirror with light (if equipped) 6-3

Storage compartment 6-3
- Glove compartment 6-4
- Center console 6-4
- Sunglasses storange compartment (if equipped) 6-5

Cup holder 6-5
- Front cup holder 6-6
- Rear cup holder 6-6

Cigarette lighter (option) 6-7
- Cigarette lighter (option) 6-7

Ashtray 6-8
- Front ashtray 6-9
- Rear ashtray 6-9

Accessory power socket 6-9
- Electrical power socket located on the lower part of the instrument panel 6-9
- Accessory power socket in the luggage compartment (if equipped) and dual power socket (option) 6-10

Interior light 6-11

Spotlight (if equipped) 6-12

Luggage area light (Wagon only) 6-13

Luggage cover (Wagon — if equipped) 6-14
- Using the cover 6-14
- To remove the cover housing 6-15
- To install the cover housing 6-15

Cargo anchorage eyelets (if equipped) 6-15

Storage tray (Wagon — if equipped) 6-16

Maintenance tools 6-17

Downloaded from www.Manualslib.com manuals search engine

Sun visors

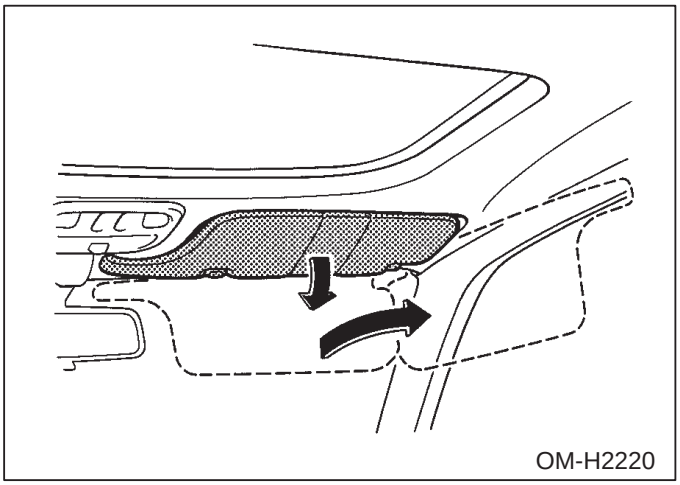

To block out glare, swing down the visors. To use the sun visor at a side window, swing it down and move it sideways.

■ Vanity mirror (if equipped)

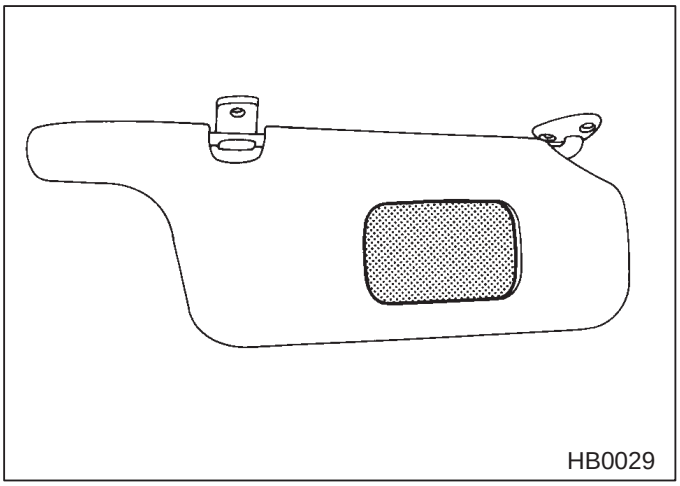

To use the vanity mirror, swing down the visor.

Downloaded from www.Manualslib.com manuals search engine

■ Vanity mirror with light (if equipped)

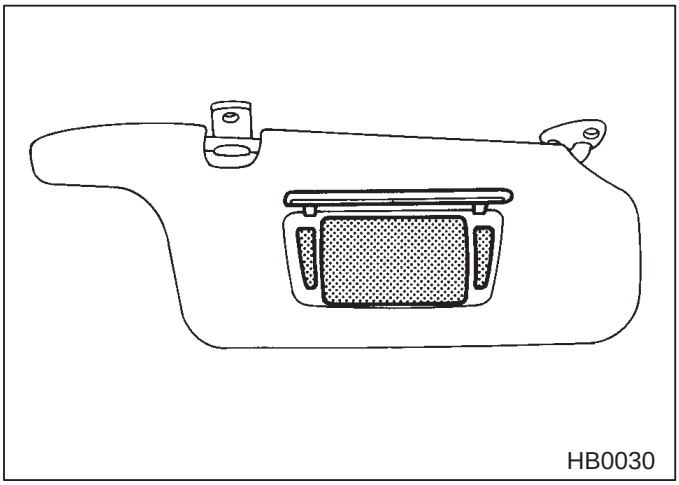

To use the vanity mirror, swing down the visor and open the cover.
The lights beside the vanity mirror come on when the ignition switch is either in the “ACC” or “ON” position and the mirror cover is opened.

Storage compartment

⚠ CAUTION

- **Always keep the storage compartment closed while driving to reduce the risk of injury in the event of sudden stops or an accident.**
- **Do not store spray cans, containers with flammable or corrosive liquids or any other dangerous items in the storage compartment.**

– CONTINUED –

Downloaded from www.Manualslib.com manuals search engine

■ Glove compartment

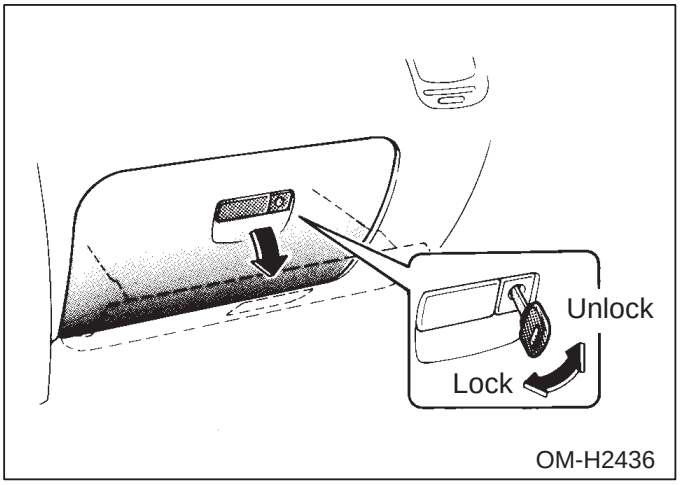

To open the glove compartment, pull the handle. To close it, push the lid firmly upward.
To lock the glove compartment, insert the master key and turn it clockwise. To unlock it, insert the master key and turn it counterclockwise.

■ Center console

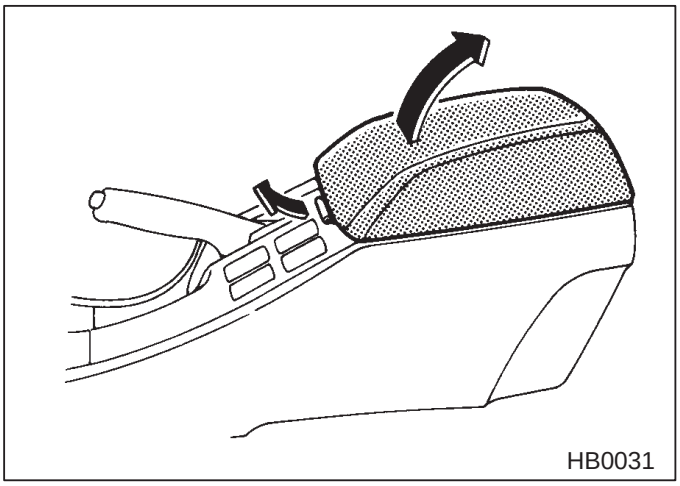

To open the lid, pull up the lock release.

Downloaded from www.Manualslib.com manuals search engine

■ Sunglasses storage compartment (if equipped)

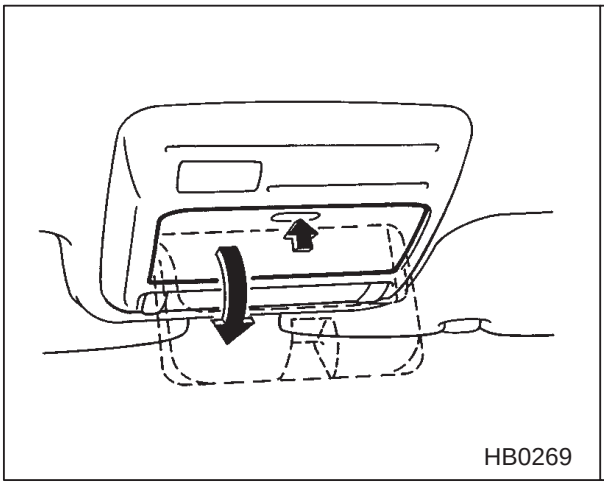
HB0269

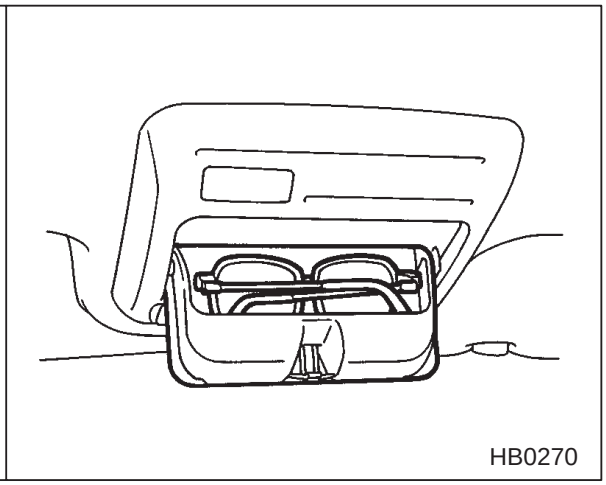
HB0270

The sunglasses storage compartment can be used to store a pair of sunglasses or small items such as a garage door opener.
To open the compartment, push on the lid lightly and it will automatically open.

Cup holder

⚠ CAUTION

- **When not in use, always keep the holder stored while driving to reduce the risk of injury in the event of a sudden stop or an accident.**
- **Do not pick up a cup from the cup holder or put a cup in the holder while you are driving, as this may distract you and lead to an accident.**
- **Take care to avoid spills. Beverages, if hot, might burn you or your passengers. Spilled beverages may also damage upholstery, carpets or audio equipment.**

– CONTINUED –

Downloaded from www.Manualslib.com manuals search engine

■ Front cup holder

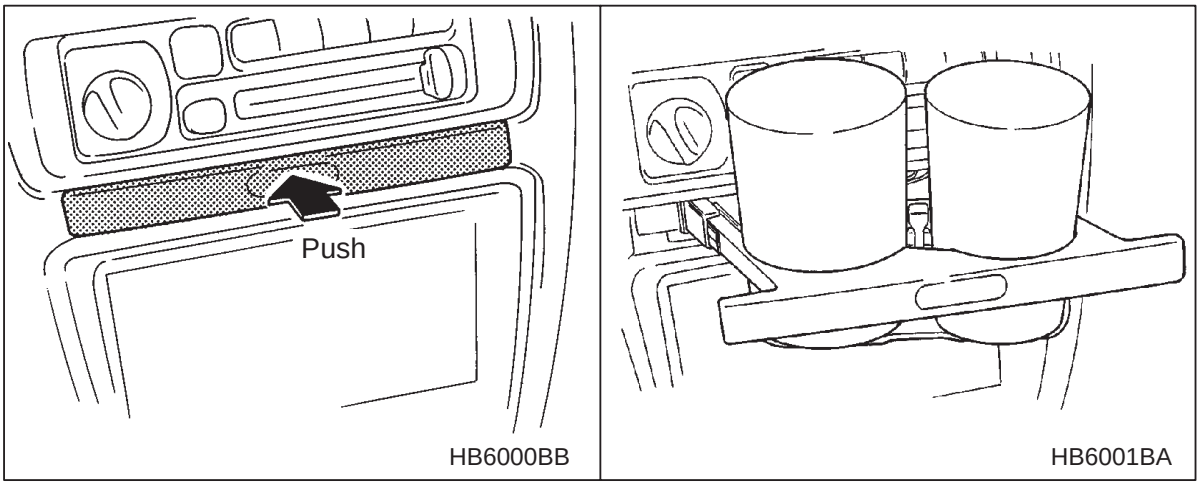

To use the cup holder, push on the center of its front surface and it will automatically pop out. Then pull it out completely.
The left side of the holder can hold a larger cup.

■ Rear cup holder (option)

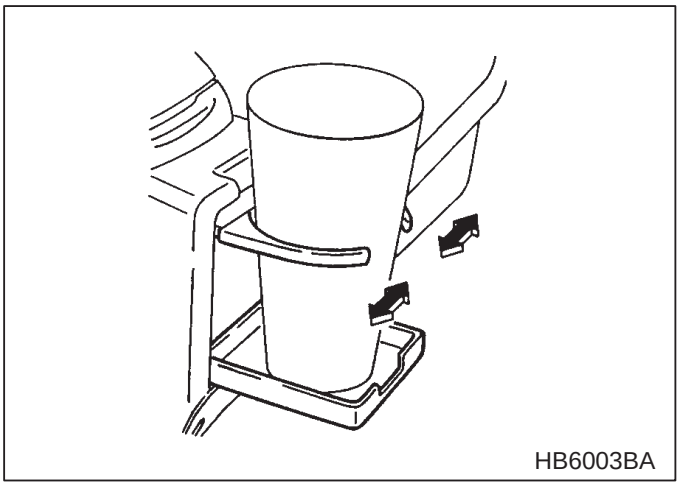

To use the cup holder, open the lid by pulling its upper edge and then raise the holder. Adjust the width of the holder to fit the cup.

Downloaded from www.Manualslib.com manuals search engine

Cigarette lighter (option)

⚠ CAUTION

The electrical power socket located on the right-lower part of the instrument panel is designed to use only a SUBARU genuine cigarette lighter plug. Do not use non-genuine cigarette lighter plugs or any “plug-in” type electrical accessories in the socket. Doing so may cause a short-circuit and overheating, resulting in a fire.

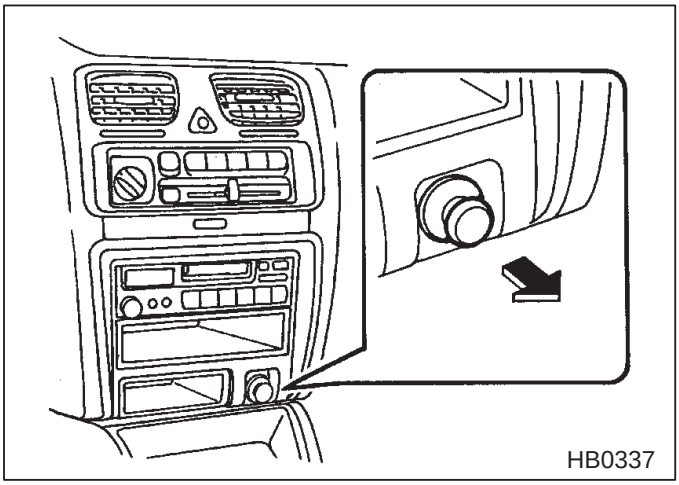

The electrical power socket located on the right-lower part of the instrument panel can be used as cigarette lighter socket. A cigarette lighter plug is an optional accessory. It is available from your SUBARU dealer.
If smoking is not desired, always put the cap on the socket to prevent any foreign object from entering it.

■ Cigarette lighter (option)

⚠ WARNING

To avoid being burned, never grasp the lighter by the end with the heating element. Doing so could result in injury and could also damage the heating element.

– CONTINUED –

Downloaded from www.Manualslib.com manuals search engine

⚠ CAUTION

Do not hold the lighter pushed in, because it will overheat.

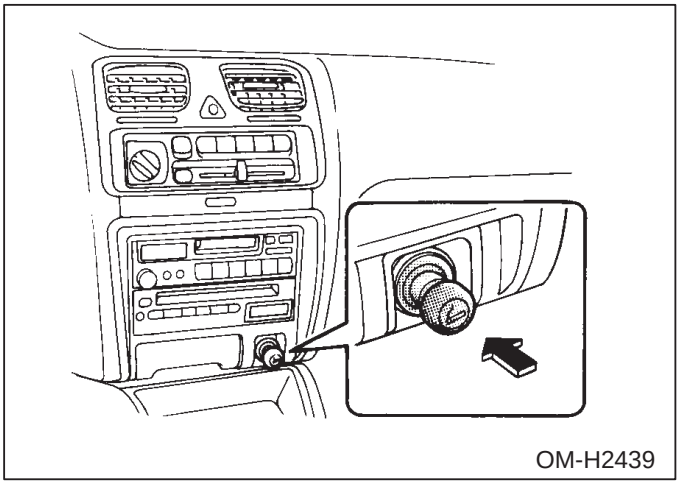

The cigarette lighter operates only when the ignition switch is in the “ON” and “ACC” position.

To use the cigarette lighter, push in the knob and wait a few moments. It will automatically spring up when ready for use.

Ashtray

⚠ CAUTION

Do not use ashtrays as waste receptacles or leave a lighted cigarette in an ashtray. This could cause a fire.

Fully close the ashtray after using it to help reduce residual smoke.

Downloaded from www.Manualslib.com manuals search engine

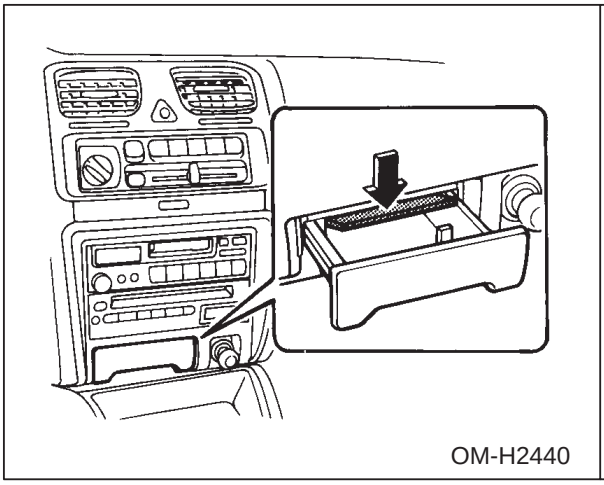
OM-H2440

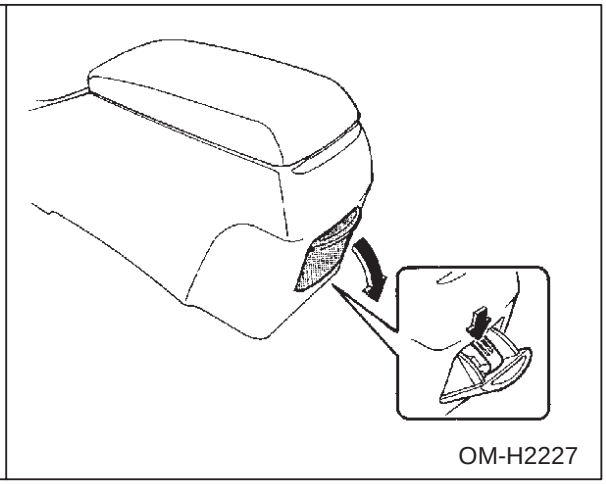
OM-H2227

■ Front ashtray

To open the ashtray, pull the lid out.

To remove the ashtray for cleaning, open it and pull it out while pushing the inner plate down.

■ Rear ashtray (if equipped)

To open the ashtray, pull the upper edge of the lid.

To remove the ashtray for cleaning, open it and pull it out while pushing the inner plate down.

Accessory power socket

■ Electrical power socket located on the right-lower part of the instrument panel

⚠ CAUTION

The electrical power socket located on the right-lower part of the instrument panel is designed to use only a SUBARU genuine cigarette lighter plug. Do not use non-genuine cigarette lighter plugs or any “plug-in” type electrical accessories in the socket. Doing so may cause a short-circuit and overheating, resulting in a fire. Refer to the Cigarette lighter section in this chapter.

– CONTINUED –

Downloaded from www.Manualslib.com manuals search engine

■ Accessory power socket in the luggage compartment (if equipped) and dual power socket (option)

⚠ CAUTION

- **Do not attempt to use a cigarette lighter in the accessory power socket or dual power socket.**
- **Do not place any foreign objects, especially metal ones such as coins or aluminum foil, into the accessory power socket or dual power socket. That could cause a short circuit. Always put the cap on the accessory power socket and dual power socket when they are not in use.**
- **Use only electrical appliances which are designed for 12V DC and which consume less than 120W. Overloading the accessory power socket or dual power socket can cause a short circuit. Do not use double adapters or more than one electrical appliance.**
- **If the plug on your electric appliance is either too loose or too tight for the accessory power socket or dual power socket, this can result in a poor contact or cause the plug to get stuck. Only use plugs that fit properly.**
- **Use of an electric appliance in the accessory power socket or dual power socket for a long period of time while the engine is not running can cause battery discharge.**
- **Before driving your vehicle, make sure that the plug and the cord on your electrical appliance will not interfere with your shifting gears and operating the accelerator and brake pedals. If they do, do not use the electrical appliance while driving.**

Downloaded from www.Manualslib.com manuals search engine

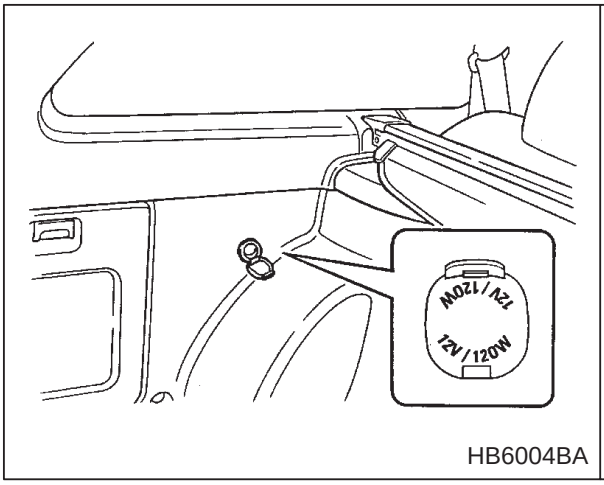

HB6004BA

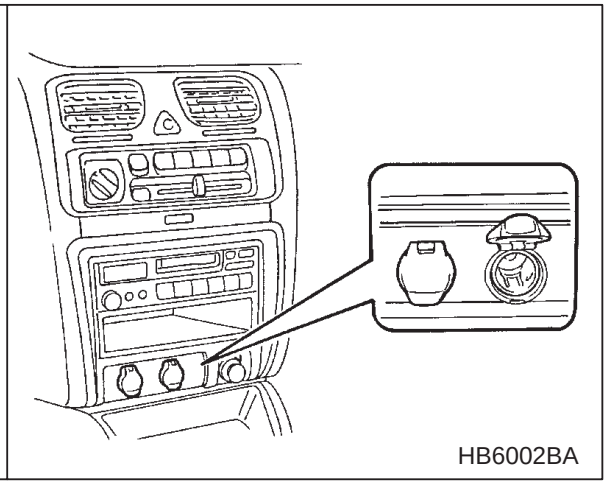
HB6002BA

Electrical power (12V DC) from the battery is on tap at the socket when the ignition switch is either in the “ACC” or “ON” position.
You can use an in-car use electrical appliance by connecting it to the socket.

Interior light

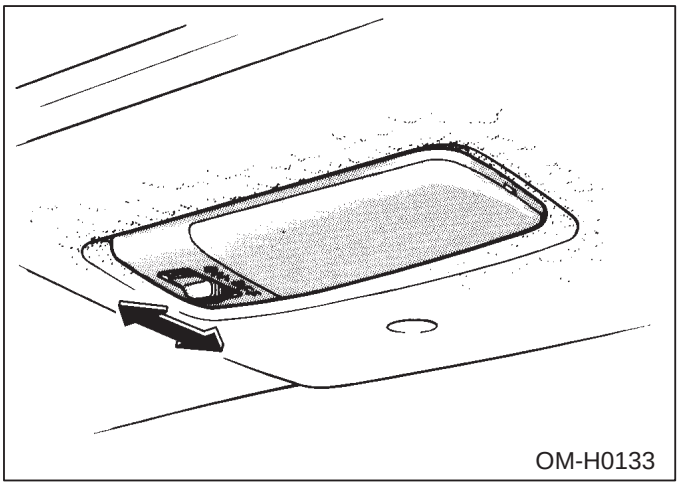
OM-H0133

The interior light switch has three positions:
ON: The light stays on continuously.
Middle position: The light comes on only when any door is opened.
OFF: The light stays off.

When leaving your vehicle, make sure the light is turned off to avoid battery discharge.

Downloaded from www.Manualslib.com manuals search engine

Spotlight (if equipped)

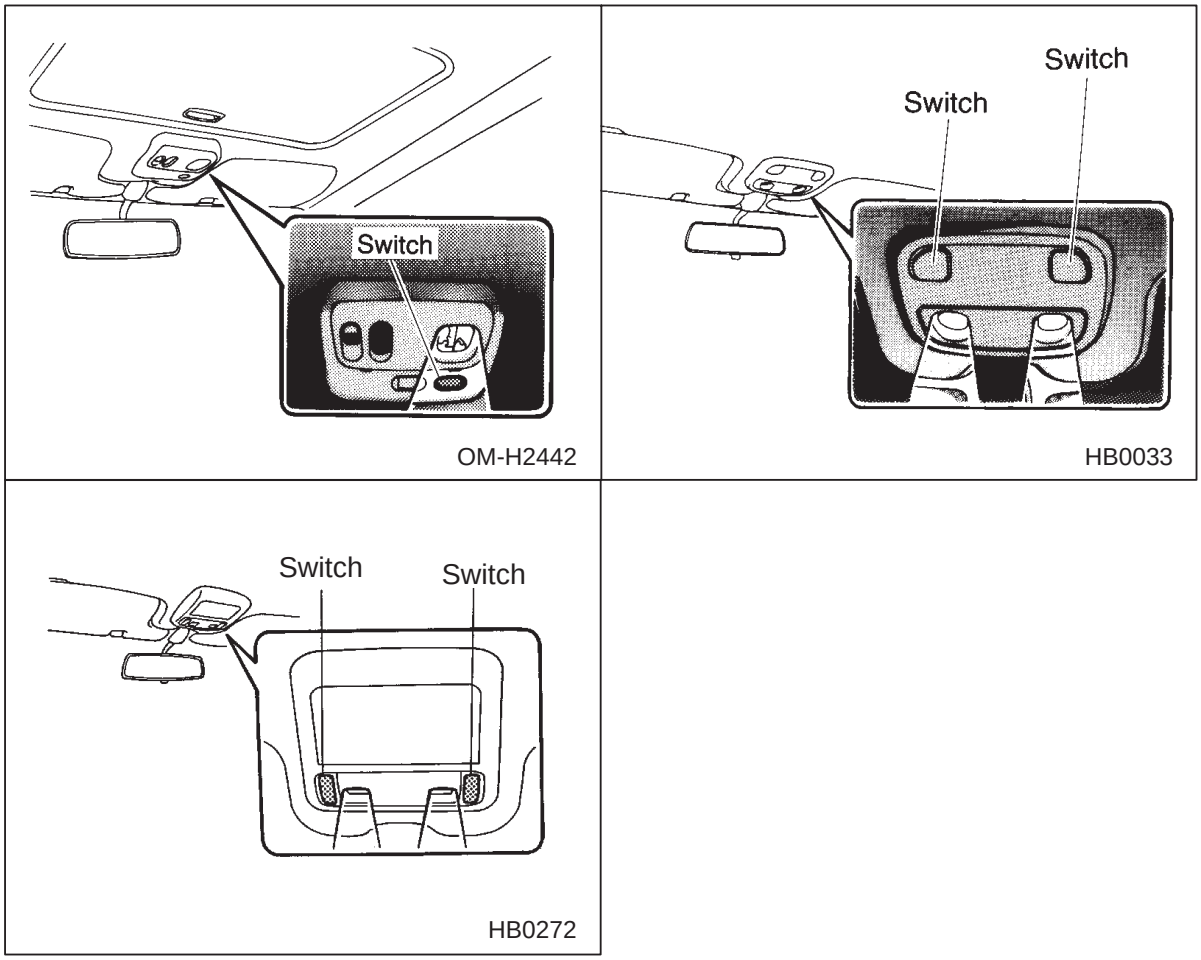

To turn on the spotlight, push the switch. To turn it off, push the switch again.

When leaving the vehicle, make sure the light is turned off to avoid battery discharge.

Downloaded from www.Manualslib.com manuals search engine

Luggage area light (Wagon only)

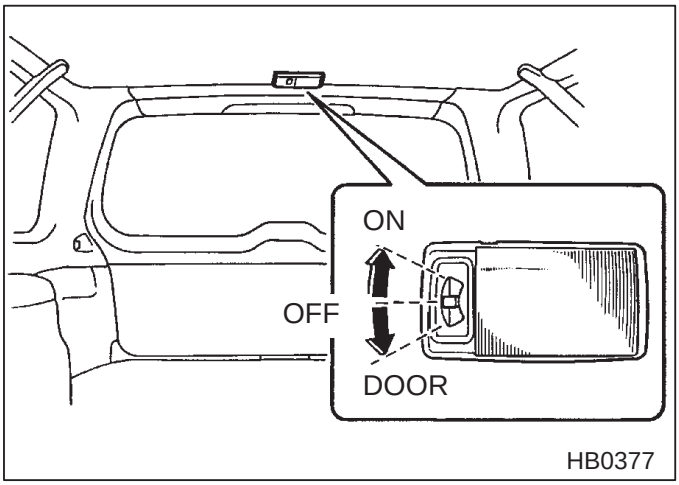

The luggage area light switch has three positions:
ON: The light stays on continuously.
DOOR: The light comes on only when the rear gate is opened.
OFF: The light stays off.

When leaving your vehicle, make sure the light is turned off to avoid battery discharge.

Downloaded from www.Manualslib.com manuals search engine

Luggage cover (Wagon — if equipped)

⚠ WARNING

Do not place anything on the extended cover. Putting excessive weight on the extended cover can break it and an object on the cover could tumble forward in the event of a sudden stop or collision. This could cause serious injury.

The luggage cover is provided for covering the luggage compartment and to protect its contents from direct sunlight. This cover is detachable to make room for additional cargo.

■ Using the cover

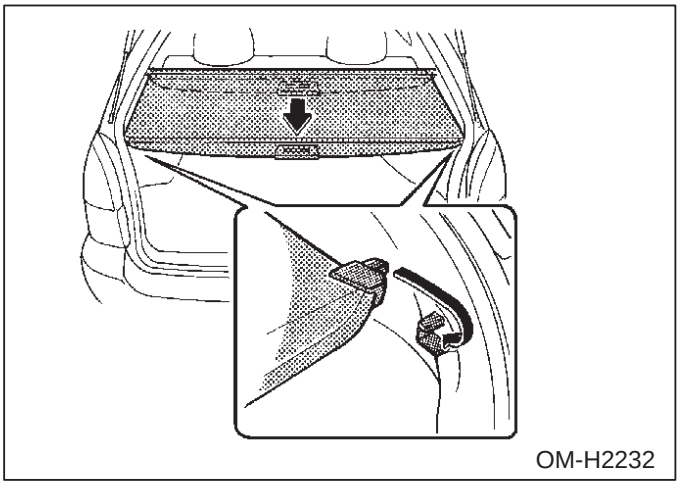

To extend the cover, pull the end of the cover out of the cover housing, then insert its hooks into the catches as shown. To rewind it, unhook it from the catches and it will rewind automatically. You should hold on to the cover and guide it back into the cover housing while it is rewinding.

Downloaded from www.Manualslib.com manuals search engine

■ To remove the cover housing

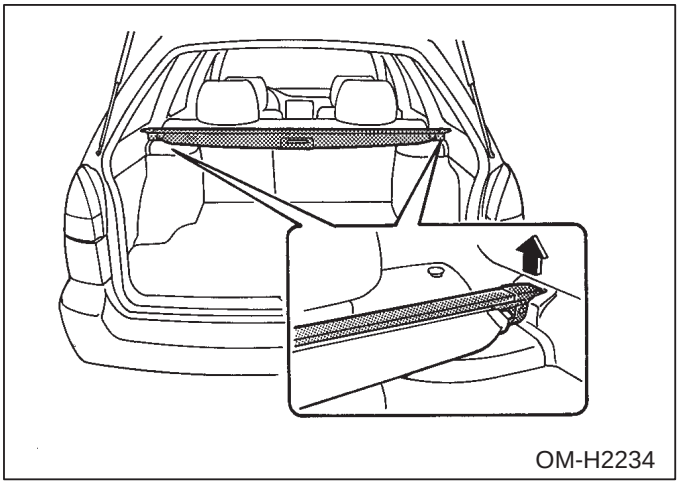

1. Rewind the cover.
2. To take it off the retainer, lift it out.
3. Store the cover housing in the luggage area.

■ To install the cover housing

Insert the both ends of the cover housing into the retainers.

Cargo anchorage eyelets (if equipped)

⚠ CAUTION

The cargo anchorage eyelets are designed only for securing light luggage. Never try to secure any luggage which weighs more than the load capacity of the anchorage eyelets. The maximum load capacity is about 44 lb. (20 kg) per eyelet.

– CONTINUED –

Downloaded from www.Manualslib.com manuals search engine

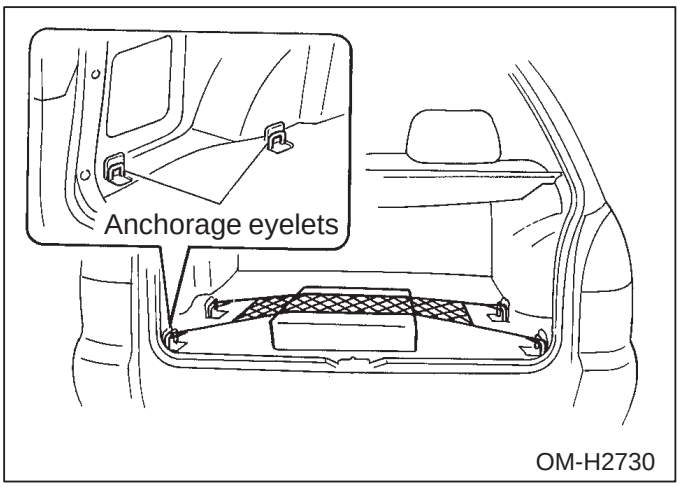

The luggage compartment is equipped with four anchorage eyelets so that luggage can be secured with a luggage net or ropes.

When using the anchorage eyelets, raise them up from under the cutouts of the luggage compartment mat. When not in use, put the eyelets down into the storing recesses.

Storage tray (Wagon — if equipped)

⚠ CAUTION

- **Always keep the lid of the storage tray closed while driving to reduce the risk of injury in the event of sudden stops or an accident.**
- **Do not store spray cans, containers with flammable or corrosive liquids or any other dangerous items in the storage tray.**

Downloaded from www.Manualslib.com manuals search engine

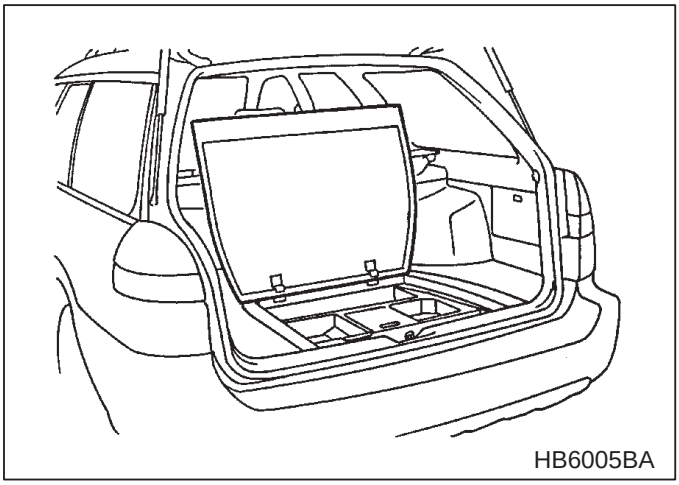

The storage tray is located under the floor of the luggage compartment and can be used to store small items. To open the lid, pull the handle up.

NOTE
When storing a flat tire, put the storage tray in the luggage compartment.

Maintenance tools

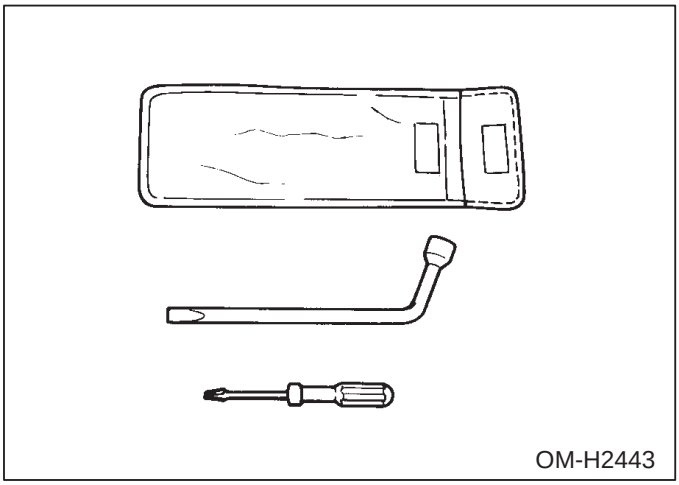

Your vehicle is equipped with the following maintenance tools:
- Screwdriver
- Wheel nut wrench

Downloaded from www.Manualslib.com manuals search engine

Starting and operating

New vehicle break-in driving 7-3
The first 1,000 miles (1,600 km) 7-3
Fuel requirements 7-4
Fuel Octane Rating 7-4
Unleaded gasoline 7-4
Gasoline for California-certified LEV and TLEV 7-4
Gasoline for cleaner air 7-4
State emission testing (U.S. only) 7-6
Engine exhaust gas (Carbon monoxide) 7-7
Catalytic converter 7-8
Fuel economy hints 7-9
Preparing to drive 7-9
Driving in foreign countries 7-10
Periodic inspections 7-10
Ignition switch 7-10
LOCK 7-11
ACC 7-12
ON 7-12
START 7-12
Key reminder chime 7-13
Key interlock release (AT vehicles only) 7-13
Starting the engine 7-13
Manual transmission vehicles 7-14
Automatic transmission vehicles 7-14
During cold weather below –4°F (–20°C) 7-15
Flooded engine 7-15
Stopping the engine 7-16
Manual transmission 7-16
Shifting speed for fuel economy 7-17
Maximum speeds 7-17
Driving tips 7-17
Automatic transmission 7-18
Selector lever 7-19
Maximum speeds 7-21
Driving tips 7-21
Shift lock release 7-21
Steering 7-23
Tilt steering wheel 7-23
Power steering 7-23

Downloaded from www.Manualslib.com manuals search engine

Cruise control (if equipped) 7-24
To set cruise control 7-24
To temporarily cancel the cruise control 7-25
To turn off the cruise control 7-25
To change the cruising speed 7-25
Hill holder (for manual transmission — if equipped) 7-26
Manual release 7-27
Parking your vehicle 7-29
Parking brake 7-29
Parking tips 7-30
Tips for using the brakes 7-31
Braking tips 7-31
Brake system 7-32
Disc brake pad wear warning indicators 7-32
ABS (Anti-Lock Brake System) (if equipped) 7-33
Driving tips for AWD vehicles 7-35
Off road driving 7-36
All AWD models except OUTBACK and SUS 7-37
OUTBACK and SUS 7-37
Winter driving 7-39
Operation during cold weather 7-39
Driving on snowy and icy roads 7-41
Snow tires 7-43
Tire chains 7-43
Rocking the vehicle 7-44
Corrosion protection 7-44
Loading your vehicle 7-44
Vehicle capacity weight 7-45
GVWR and GAWR 7-46
Trailer towing (for all vehicles except OUTBACK and SUS) 7-47
Warranties and maintenance 7-47
Maximum load limits 7-48
Trailer hitches 7-49
Side mirrors 7-49
Trailer lights 7-50
Tires 7-50
Trailer towing tips 7-51
Trailer towing (for OUTBACK and SUS) 7-52
Warranties and maintenance 7-53
Maximum load limits 7-53
Trailer hitches 7-57
Connecting a trailer 7-58
Trailer towing tips 7-60

Downloaded from www.Manualslib.com manuals search engine

New vehicle break-in driving

■ The first 1,000 miles (1,600 km)

The performance and long life of your vehicle are dependent on how you handle and care for your vehicle while it is new. Follow these instructions during the first 1,000 miles (1,600 km):

- Do not race the engine.

▼ Break-in engine speed limit

- Vehicle with tachometer

Never exceed 4,000 rpm engine speed except for brief acceleration in an emergency.

- Vehicle without tachometer (for manual transmission)

Do not exceed the speed limits below for each gear position except for brief acceleration in an emergency.

mph (km/h)

	1st	2nd	3rd	4th
AWD	20 (35)	35 (60)	50 (80)	65 (105)

- Vehicles without tachometer (for automatic transmission)

Try to drive at moderate speeds while accelerating and braking smoothly. Proper gears are selected automatically according to the driving conditions.

- Do not drive at one constant engine or vehicle speed for a long time, either fast or slow.
- Avoid starting suddenly and rapid acceleration, except in an emergency.
- Avoid hard braking, except in an emergency.

The same break-in procedures should be applied to an overhauled engine, newly mounted engine or when brake pads or brake linings are replaced with new ones.

Downloaded from www.Manualslib.com manuals search engine

Fuel requirements

■ Fuel Octane Rating

Your engine is designed to use only unleaded gasoline with an octane rating of 87 AKI or higher. This octane rating is the average of the Research Octane and Motor Octane numbers and is commonly referred to as the Anti Knock Index (AKI).

Using a gasoline with a lower octane rating can cause persistent and heavy knocking, which can damage the engine. Do not be concerned if your vehicle sometimes knocks lightly when you drive up a hill or when you accelerate. See your dealer or a qualified service technician if you use a gasoline with the specified octane rating and your vehicle knocks heavily or persistently.

■ Unleaded gasoline

The neck of the fuel filler pipe is designed to accept only an unleaded gasoline filler nozzle. Under no circumstances should leaded gasoline be used because it will damage the emission control system and may impair driveability and fuel economy.

■ Gasoline for California-certified LEV and TLEV

If your vehicle is a California-certified Low Emission Vehicle (LEV) or Transitional Low Emission Vehicle (TLEV) as indicated on the underhood tune-up label, it is designed to optimize engine and emission control system performance with gasoline that meets California specifications. Your vehicle will operate on gasoline meeting Federal specifications.

■ Gasoline for cleaner air

⚠ CAUTION

Do not let fuel spill on the exterior surfaces of the vehicle. Fuels containing alcohol may cause paint damage, which is not covered under the SUBARU Limited Warranty.

Downloaded from www.Manualslib.com manuals search engine

Your use of gasoline with detergent additives will help prevent deposits from forming in your engine and fuel system. This helps keep your engine in tune and your emission control system working properly, and is a way of doing your part for cleaner air. If you continuously use a high quality fuel with the proper detergent and other additives, you should never need to add any fuel system cleaning agents to your fuel rank.

Many gasolines are now blended with materials called oxygenates. Use of these fuels can also help keep the air cleaner. SUBARU approves the use of oxygenated blend fuels, such as MTBE (Methyl Tertiary Butyl Ether) or ethanol (ethyl or grain alcohol). The blended fuels should contain no more than 15% MTBE or 10% ethanol for the proper operation of your SUBARU.

In addition, some gasoline suppliers are now producing reformulated gasolines, which are designed to reduce vehicle emissions. SUBARU approves the use of reformulated gasoline.

If you are not sure what the fuel contains, you should ask your service station operators if their gasolines contain detergents and oxygenates and if they have been reformulated to reduce vehicle emissions.

As additional guidance, only use fuels suited for your vehicle as explained below.

- Fuel should be unleaded and have an octane rating no lower than that specified in this manual.
- Methanol (methyl or wood alcohol) is sometimes mixed with unleaded gasoline. Methanol can be used in your vehicle **ONLY** if it does not exceed 5% of the fuel mixture **AND** if it is accompanied by sufficient quantities of the proper cosolvents and corrosion inhibitors required to prevent damage to the fuel system. Do not use fuel containing methanol **EXCEPT** under these conditions.
- If undesirable driveability problems are experienced and you suspect they may be fuel related, try a different brand of gasoline before seeking service at your SUBARU dealer.
- Fuel system damage or driveability problems which result from the use of improper fuel are not covered under the SUBARU Limited Warranty.

Downloaded from www.Manualslib.com manuals search engine

State emission testing (U.S. only)

⚠ WARNING

Testing of a Full-Time All-Wheel Drive vehicle must NEVER be performed on a single two-wheel dynamometer nor should a state I/M program inspector or its contractors install the FWD fuse in the engine compartment. Attempting to do so will result in transmission damage and in uncontrolled vehicle movement and may cause an accident or injuries to persons nearby.

⚠ CAUTION

Resultant vehicle damage due to improper testing is not covered under the SUBARU Limited Warranty and is the responsibility of the State I/M Program or its contractors or licensees.

The 1990 Clean Air Act Amendments require the Environmental Protection Agency (EPA) to implement programs to reduce air pollution from motor vehicles. States are required to adopt either a “basic” or “enhanced” vehicle Inspection/Maintenance (I/M) Program depending on the severity of their air pollution problem. The “enhanced” I/M test simulates actual driving conditions on a dynamometer and permits more accurate measurement of tailpipe emissions than the “basic” I/M test which measures emissions only during engine operating conditions at idle and 2,500 RPM. The “Enhanced” I/M test also includes a pressure check to identify evaporative emissions leaks in the fuel system.

The U.S. EPA has **EXEMPTED** SUBARU Full-Time All-Wheel Drive (AWD) vehicles from the following performance warranty short tests:

- Loaded Test
- Idle Test With Loaded Preconditioning

The exemption information appears on the underhood Vehicle Emission Control Information (VECI) label.
State I/M Programs should test affected SUBARU Full-Time AWD models using any other EPA approved performance warranty short test.

Downloaded from www.Manualslib.com manuals search engine

SUBARU models equipped with the Full-Time AWD feature should be tested on a four-wheel drive dynamometer (State I/M Program may elect to use a “double two-wheel dynamometer” arrangement). Under NO circumstances should any SUBARU Full-Time AWD equipped vehicle be modified for I/M testing. This prohibition includes, but is not limited to: (1) jacking the rear wheels off the ground, (2) driveshaft disconnection, and/or (3) usage of the FWD fuse in the engine compartment. This fuse is for Full-Time AWD diagnostic service purposes only.

Engine exhaust gas (Carbon monoxide)

⚠ WARNING

- **Never inhale engine exhaust gas. Engine exhaust gas contains carbon monoxide, a colorless and odorless gas which is dangerous, or even lethal, if inhaled.**
- **Always properly maintain the engine exhaust system to prevent engine exhaust gas from entering the vehicle.**
- **Never run the engine in a closed space, such as a garage, except for the brief time needed to drive the vehicle in or out of it.**
- **Avoid remaining in a parked vehicle for a lengthy time while the engine is running. If that is unavoidable, then use the ventilation fan to force fresh air into the vehicle.**
- **Always keep the front ventilator inlet grille free from snow, leaves or other obstructions to ensure that the ventilation system always works properly.**
- **If at any time you suspect that exhaust fumes are entering the vehicle, have the problem checked and corrected as soon as possible. If you must drive under these conditions, drive only with all windows fully open.**
- **Keep the trunk lid or rear gate closed while driving to prevent exhaust gas from entering the vehicle.**

NOTE

Due to the expansion and contraction of the metals used in the manufacture of the exhaust system, you may hear a crackling sound coming from

– CONTINUED –

Downloaded from www.Manualslib.com manuals search engine

the exhaust system for a short time after the engine has been shut off. This sound is normal.

Catalytic converter

⚠ WARNING

- **Avoid fire hazards. Do not drive or park the vehicle anywhere near flammable materials (e.g. grass, paper, rags or leaves), because the catalytic converter operates at very high temperatures.**
- **Keep everyone and flammable materials away from the exhaust pipe while the engine is running. The exhaust gas is very hot.**

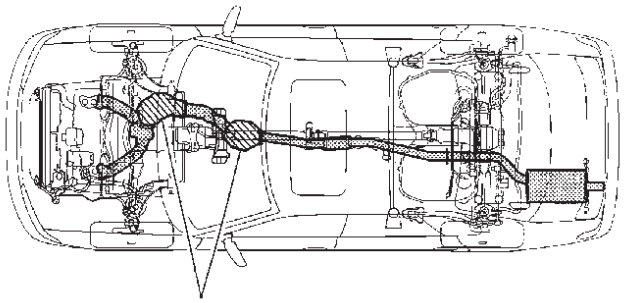

OM-H2530

The catalytic converter is installed in the exhaust system. It serves as a catalyst to reduce HC, CO and NOx in exhaust gases, thus providing cleaner exhaust.

To avoid damage to the catalytic converter:

- Use only unleaded fuel. Even a small amount of leaded fuel will damage the catalytic converter.
- Never start the engine by pushing or pulling the vehicle.
- Avoid racing the engine.
- Never turn off the ignition switch while the vehicle is moving.
- Keep your engine tuned-up. If you feel the engine running rough (mis-

Downloaded from www.Manualslib.com manuals search engine

firing, backfiring or incomplete combustion), have your vehicle checked and repaired by an authorized SUBARU dealer.

- Do not apply undercoating or rust prevention treatment to the heat shield of catalytic converter and the exhaust system

Fuel economy hints

The following suggestions will help to save your fuel.

- Select the proper gear position for the speed and road conditions.
- Avoid sudden acceleration or deceleration. Always accelerate gently until you reach the desired speed. Then try to maintain that speed for as long as possible.
- Do not pump the accelerator and avoid racing the engine.
- Avoid unnecessary engine idling.
- Keep the engine properly tuned.
- Keep the tires inflated to the correct pressure shown on the tire placard, which is located under the door latch on the driver's side. Low pressure will increase tire wear and fuel consumption.
- Use the air conditioner only when necessary.
- Keep the front and rear wheels in proper alignment.
- Avoid carrying unnecessary luggage or cargo.

Preparing to drive

You should perform the following checks and adjustments every day before you start driving.

1. Check that all windows, mirrors, and lights are clean and unobstructed.
2. Check the appearance and condition of the tires. Also check tires for proper inflation.
3. Look under the vehicle for any sign of the leaks.
4. Check that the hood, trunk and rear gate are fully closed.
5. Check the adjustment of the seat.
6. Check the adjustment of the inside and outside mirrors.

– CONTINUED –

Downloaded from www.Manualslib.com manuals search engine

7. Fasten your seat belt. Check that your passengers have fastened their seat belts.
8. Check the operation of the warning and indicator lights when the ignition switch is turned to the “ON” position.
9. Check the gauges, indicator and warning lights after starting the engine.

NOTE
Engine oil, engine coolant, brake fluid, washer fluid and other fluid levels should be checked daily, weekly or at fuel stops.

Driving in foreign countries

When planning to use your vehicle in another country:
- Confirm the availability of the correct fuel. (Refer to Fuel Requirement section in this chapter.)
- Comply with all regulations and requirements of each country.

Periodic inspections

To keep your vehicle in the best condition at all times, always have the recommended maintenance services listed in the maintenance schedule in the warranty and maintenance booklet performed at the specified time or mileage intervals.

Ignition switch

⚠ WARNING
Never turn the ignition switch to “LOCK” while the vehicle is being driven or towed because that will lock the steering wheel, preventing steering control. And when the engine is turned off, it takes a much greater effort than usual to steer.

The ignition switch has four positions: LOCK, ACC, ON and START.

Downloaded from www.Manualslib.com manuals search engine

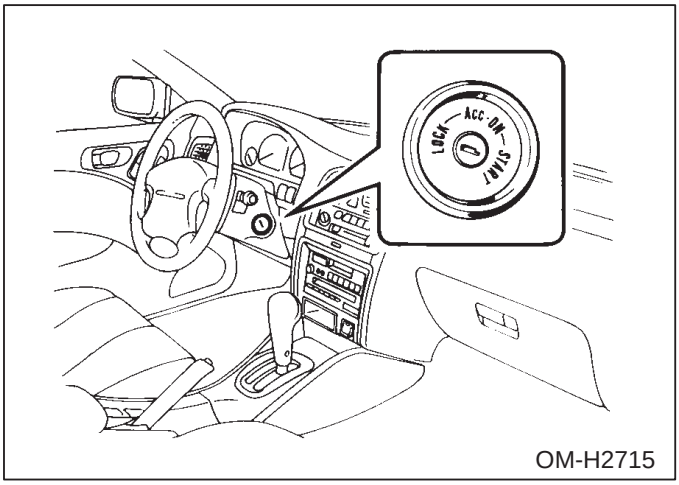

OM-H2715

■ LOCK

The key can only be inserted or removed in this position. The ignition switch will lock the steering wheel when you remove the key.
If turning the key is difficult, turn the steering wheel slightly to the right and left as you turn the key.

▼ Automatic transmission vehicles:

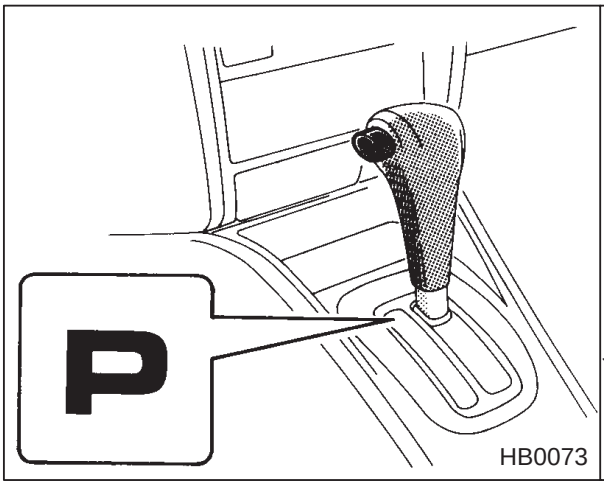

HB0073

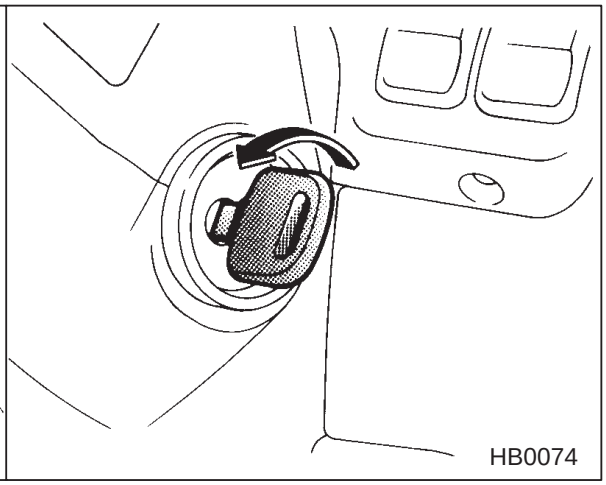
HB0074

The key can be turned from “ACC” to “LOCK” only when the selector lever is in the “P” position.

– CONTINUED –

Downloaded from www.Manualslib.com manuals search engine

▼ **Manual transmission vehicles:**

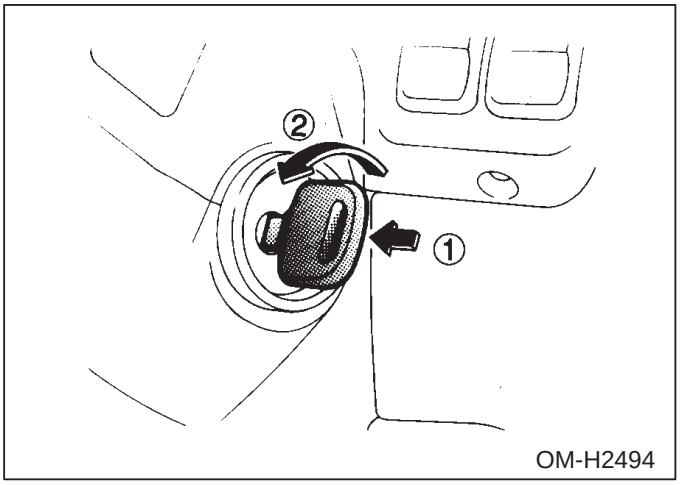

The key can be turned from “ACC” to “LOCK” only when the key is pushed in while turning it.

■ ACC

In this position the electrical accessories (radio, accessory power socket, etc.) can be used.

■ ON

This is the normal operating position after the engine is started.

■ START

> ⚠ **CAUTION**
>
> **Do not turn the ignition switch to the “START” position while the engine is running.**

The engine is started in this position. The starter cranks the engine to start it. When the key is released (after the engine has started), the key automatically returns to the “ON” position.

Downloaded from www.Manualslib.com manuals search engine

■ Key reminder chime

The reminder chime sounds when the driver's door opens and the key is in the "LOCK" or "ACC" positions. The chime stops when the key is removed from the ignition switch.

■ Key interlock release (AT vehicles only)

If the key can not be turned to the "LOCK" position even when the selector lever is in the "P" position:

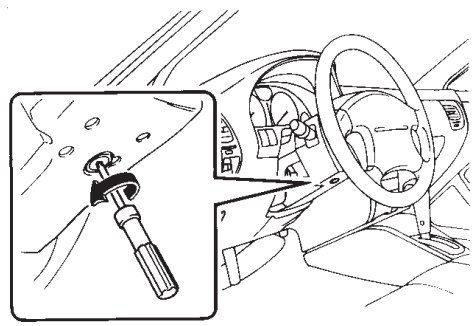

OM-H2707

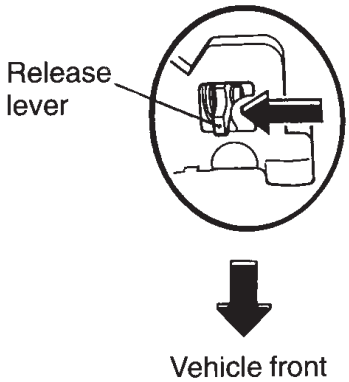

OM-H0146

1. Take out the screwdriver from the tool bag.
2. Remove the cover under the steering column using a phillips screwdriver.
3. Turn the ignition key while pressing the key interlock release lever.

Take your vehicle to the nearest SUBARU dealer immediately to have the key interlock system repaired.

Starting the engine

⚠ CAUTION

Do not operate the starter motor continuously for more than ten seconds. If the engine fails to start after operating the starter for five to ten seconds, wait for ten seconds or more before trying again.

– CONTINUED –

Downloaded from www.Manualslib.com manuals search engine

■ Manual transmission vehicles

1. Apply the parking brake.
2. Turn off unnecessary lights and accessories.
3. Press the clutch pedal to the floor and shift the shift lever into neutral. Hold the clutch pedal to the floor while starting the engine. The starter motor will only operate when the clutch pedal is pressed fully to the floor.
4. Turn the ignition switch to the “ON” position and check the operation of the warning and indicator lights. Refer to Warning and Indicator Lights section (Chapter 3).
5. Turn the ignition switch to the “START” position without depressing the accelerator pedal. Release the key immediately after the engine has started.

If the engine does not start within ten seconds, wait a while and then turn the ignition switch to the “START” position again while depressing the accelerator pedal half way down.

6. Confirm that all warning and indicator lights have gone off after the engine has started. The fuel injection system automatically lowers the idle speed as the engine warms up.

■ Automatic transmission vehicles

⚠ CAUTION

If you restart the engine while the vehicle is moving, shift the selector lever into the “N” position. Do not attempt to place the selector lever of a moving vehicle into the “P” position.

1. Apply the parking brake.
2. Turn off unnecessary lights and accessories.
3. Shift the selector lever to the “P” or “N” position (preferably “P” position).

The starter will only operate when the select lever is at the “P” or “N” position.

4. Turn the ignition switch to the “ON” position and check the operation of the warning and indicator lights. Refer to Warning and Indicator Lights section (Chapter 3).

Downloaded from www.Manualslib.com manuals search engine

5. Turn the ignition switch to the “START” position **without depressing the accelerator pedal**. Release the key immediately after the engine has started.

If the engine does not start within ten seconds, wait a while and then turn the ignition switch to the “START” position again while depressing the accelerator pedal half way down.

6. Confirm that all warning and indicator lights have gone out after the engine has started. The fuel injection system automatically lowers the idle speed as the engine warms up.

While the engine is warming up, make sure that the selector lever is at the “P” or “N” position and that the parking brake is applied.

■ During cold weather below –4°F (–20°C)

If the engine is difficult to start using the normal method (without depressing the accelerator pedal), turn the ignition switch to the “START” position while slightly depressing the accelerator pedal.

■ Flooded engine

If the engine does not start, it may be flooded (excessive fuel in the engine).
In case of a flooded engine, turn the starter motor for five seconds with the accelerator pedal fully depressed. Repeat this two or three times until the engine starts. Release the ignition switch and accelerator pedal as soon as the engine starts.

Downloaded from www.Manualslib.com manuals search engine

Stopping the engine

⚠ WARNING

Do not stop the engine when the vehicle is moving. This will cause loss of power to the power steering and the brake booster, making steering and braking more difficult. It could also result in accidental activation of the "LOCK" position on the ignition switch, causing the steering wheel to lock.

The ignition switch should be turned off only when the engine is idling.

Manual transmission

⚠ CAUTION

Shift into reverse ONLY when the vehicle has completely stopped. It may cause damage to the transmission to try shifting into reverse when the vehicle is moving.

The manual transmission is a fully synchromeshed 5-forward and 1-reverse speed transmission.

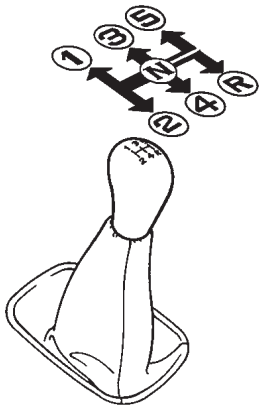

OM-H2241

The shift pattern is shown on the shift lever knob. When shifting from 5th gear to reverse gear, first return the shift lever to the neutral position then

Downloaded from www.Manualslib.com manuals search engine

shift into reverse gear.
To change gears, fully depress the clutch pedal, move the shift lever, and gradually let the pedal up.

■ Shifting speed for fuel economy

The best compromise between fuel economy and vehicle performance during normal driving is ensured by shifting up at the speeds listed in the following table.

Shift up	mph (km/h)
1st to 2nd	15 (24)
2nd to 3rd	25 (40)
3rd to 4th	40 (65)
4th to 5th	45 (73)

■ Maximum speeds

▼ Vehicle with tachometer

Never drive with the tachometer needle in the critical engine speed range except for brief acceleration in an emergency.

▼ Vehicle without tachometer

Never exceed the speed limits below for each gear position except for brief acceleration in an emergency.

mph (km/h)

	1st	2nd	3rd
AWD	30 (45)	50 (80)	70 (115)

■ Driving tips

Do not drive with your foot resting on the clutch pedal and do not use the clutch to hold your vehicle at standstill on an upgrade. Either of those actions may cause clutch damage.

– CONTINUED –

Downloaded from www.Manualslib.com manuals search engine

Do not drive with your hand resting on the shift lever. This may cause wear on the transmission components.

When it is necessary to reduce vehicle speed due to slow traffic, turning corners, or driving up steep hills, downshift to a lower gear before the engine starts to labor.

On steep downgrades, downshift the transmission to 4th, 3rd or 2nd gear as necessary; this helps to maintain a safe speed and to extend brake pad life.
In this way, the engine provides a braking effect. Remember, if you “ride” (over use) the brakes while descending a hill, they may overheat and not work properly.

Automatic transmission

⚠ WARNING

Do not shift from the “P” or “N” position into the “D”, “3”, “2”, “1” or “R” position while depressing the accelerator pedal. This may cause the vehicle to jump forward or backward.

⚠ CAUTION

- **Shift into the “P” or “R” position only after the vehicle is completely stopped. Shifting while the vehicle is moving may cause damage to the transmission.**
- **Do not race the engine for more than five seconds in any position except the “N” or “P” position when the brake is set or the tires are on blocks. This may cause the automatic transmission fluid to overheat.**

The automatic transmission is an electronically controlled with 4-forward speeds and 1-reverse speed.

Downloaded from www.Manualslib.com manuals search engine

■ Selector lever

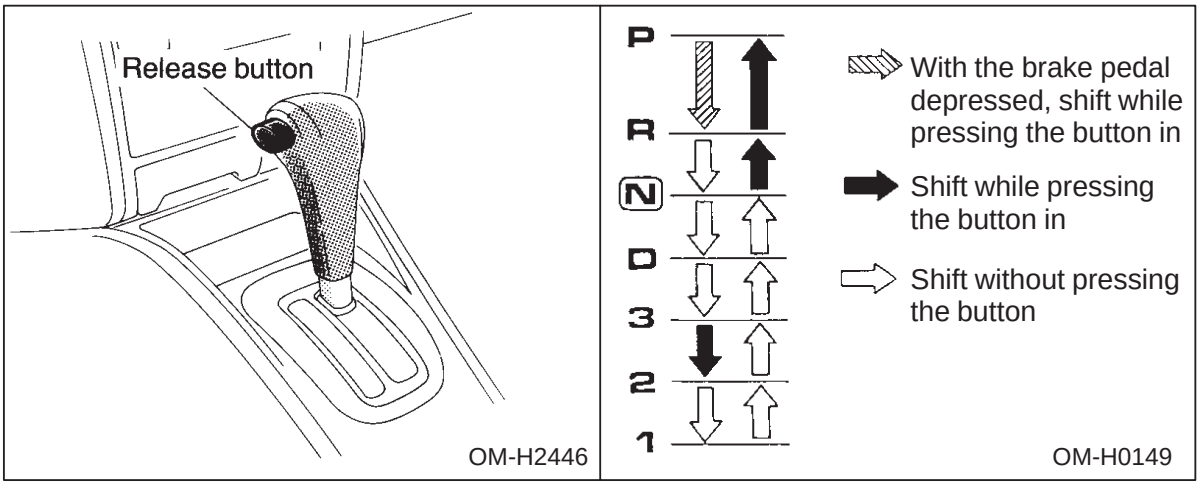

The selector lever has seven positions.
The release button must be pushed to select the “P”, “R”, or “2” positions.

▼ P (Park)

This position is for parking the vehicle and starting the engine.
In this position, the transmission is mechanically locked to prevent the vehicle from rolling freely.

When you park the vehicle, first set the parking brake fully, then shift into the “P” position. Do not hold the vehicle only with the transmission.

The shift interlock function is employed in this automatic transmission system to ensure safety of starting the vehicle.

To shift the selector lever from the “P” to the any other position, you have to depress the brake pedal fully then push the release button on the selector lever when the ignition switch is in the “ON” position. This prevents the vehicle from lurching off when starting.

If the shift lever should not move from the “P” position with the brake pedal depressed and the release button pushed in, refer to Shift Lock Release section in this chapter.

– CONTINUED –

Downloaded from www.Manualslib.com manuals search engine

▼ R (Reverse)

This position is for backing the vehicle.

To shift from the “N” to “R” position, first stop the vehicle completely then move the lever to the “R” position while pushing the release button.

▼ N (Neutral)

This position is for restarting a stalled engine.
In this position the wheels and transmission are not locked. In this position, the transmission is neutral; the vehicle will roll freely, even on the slightest incline unless the parking brake or brakes are on.

▼ D (Drive)

This position is for normal driving.
The transmission automatically shifts into a suitable gear from 1st to 4th according to the vehicle speed and the acceleration you require.

When more acceleration is required in this position, press the accelerator pedal fully to the floor and hold that position. The transmission will automatically downshift to 3rd, 2nd or 1st gear. When you release the pedal, the transmission will return to the original gear position.

▼ 3 (Third)

This position is for using engine braking when going down a hill or for climbing a grade.
The transmission automatically shifts into a suitable gear from 1st to 3rd according to the vehicle speed and the acceleration you require.

When more acceleration is required in this position, press the accelerator pedal fully to the floor and hold that position. The transmission will automatically downshift to 2nd or 1st gear. When you release the pedal, the transmission will return to the original gear position.

Downloaded from www.Manualslib.com manuals search engine

▼ 2 (Second)

To shift from the “3” to “2” position, push the release button.

This position is for using engine braking when going down a hill or for climbing a steep grade.

In this position, the transmission holds in the 2nd gear.
Use this position when starting off from a standstill on slippery road surfaces such as mud or snow. It will ensure greater traction.

▼ 1 (First)

This position is for driving up or down very steep grades, or driving through mud or sand, or on slippery surfaces. In this position, the transmission holds in the 1st gear.

■ Maximum speeds

Never drive with the tachometer needle in the critical engine speed range except for brief acceleration in an emergency.

■ Driving tips

- Always apply the foot or parking brake when the vehicle is stopped in the “D”, “3”, “2”, “1”, or “R” position.
- Always set the parking brake when parking your vehicle. Do not hold the vehicle only with the transmission.
- Never shift into the “D”, “3”, “2” or “1” position while backing the vehicle.
- Do not keep the vehicle in a stationary position on an uphill grade by using the “D”, “3”, “2” or “1” position. Use the brake instead.

■ Shift lock release

If the selector lever does not move from the “P” position with the brake pedal depressed and the release button pushed in, perform the following steps:
To override the shift lock:

1. Set the parking brake and stop the engine.

– CONTINUED –

Downloaded from www.Manualslib.com manuals search engine

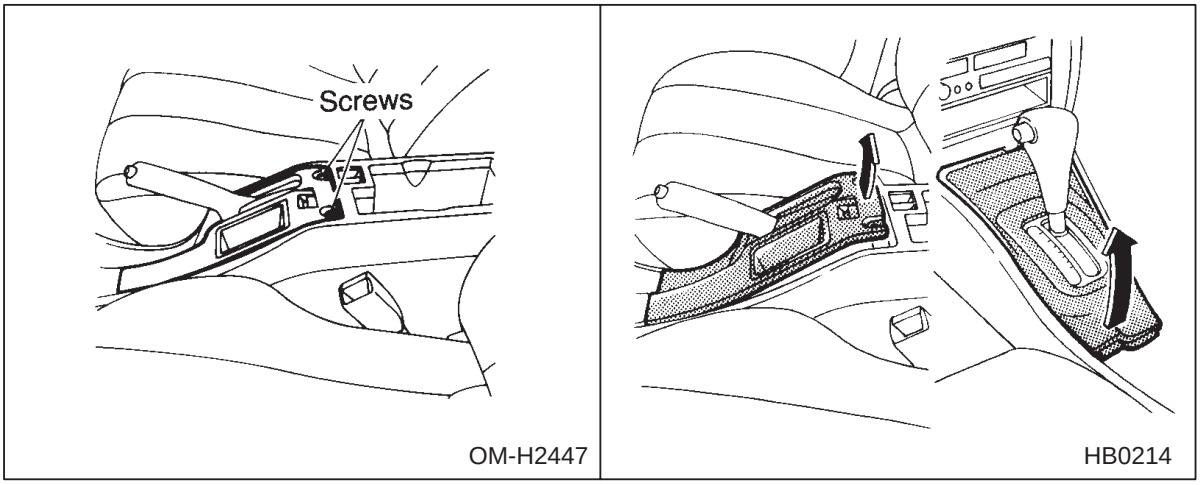

2. Take out the screwdriver from the tool bag.
3. Open the center console and remove two screws securing the parking brake lever cover.
4. Remove the parking brake lever cover by pulling up on the cover's rear end.
5. Remove the selector lever cover by pulling up the cover's rear end.

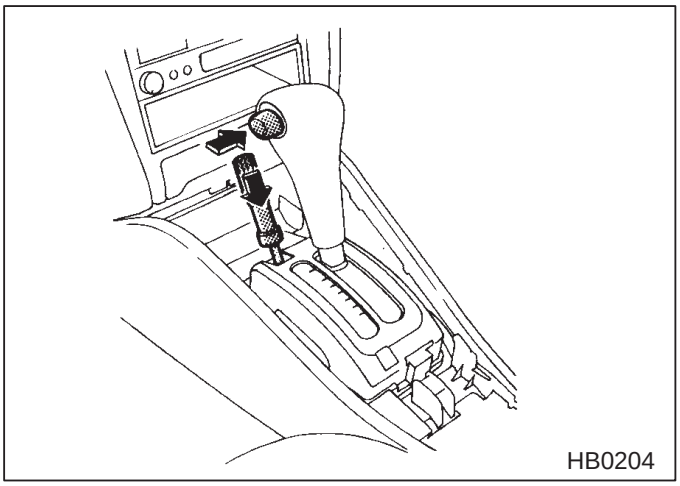

6. Insert the phillips screwdriver into the hole.
7. Push down on the screwdriver while pushing the release button and move the selector lever from the "P" to the "N" position.
8. Remove the screwdriver from the hole. Depress the brake pedal and start the engine.

Take your vehicle to the nearest SUBARU dealer immediately to have the system repaired.

Downloaded from www.Manualslib.com manuals search engine

Steering.

■ Tilt steering wheel

⚠ WARNING

Do not adjust the steering tilt position while driving. This may cause loss of vehicle control and result in personal injury.

▼ Tilt adjustment

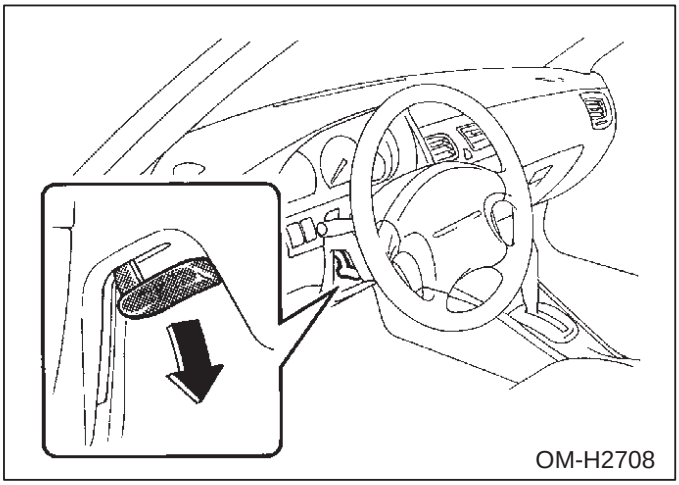

1. Adjust the seat position. Refer to Front Seat section (chapter 2).
2. Pull the tilt lock lever down.
3. Move the steering wheel to the desired level.
4. Push the lever up to lock the steering wheel in place.
5. Make sure that the steering wheel is securely locked by moving it up and down.

■ Power steering

⚠ CAUTION

Do not hold the steering wheel at the fully locked position left or right for more than five seconds. This may damage the power steering pump.

– CONTINUED –

Downloaded from www.Manualslib.com manuals search engine

The power steering system operates only when the engine is running.
If you lose power steering assist because the engine stops or the system fails to function, you can steer but it will take much more effort.

Cruise control (if equipped)

⚠ WARNING

Do not use the cruise control under any of the following conditions. This may cause loss of vehicle control:

- **driving up or down a steep grade**
- **driving on slippery or winding roads**
- **driving in heavy traffic**

Cruise control enables you to maintain a constant vehicle speed without holding your foot on the accelerator pedal and it is operative when the vehicle speed is 25 mph (40 km/h) or more. Make sure the main switch is turned “OFF” when the cruise control is not in use to avoid unintentional cruise setting.

■ To set cruise control

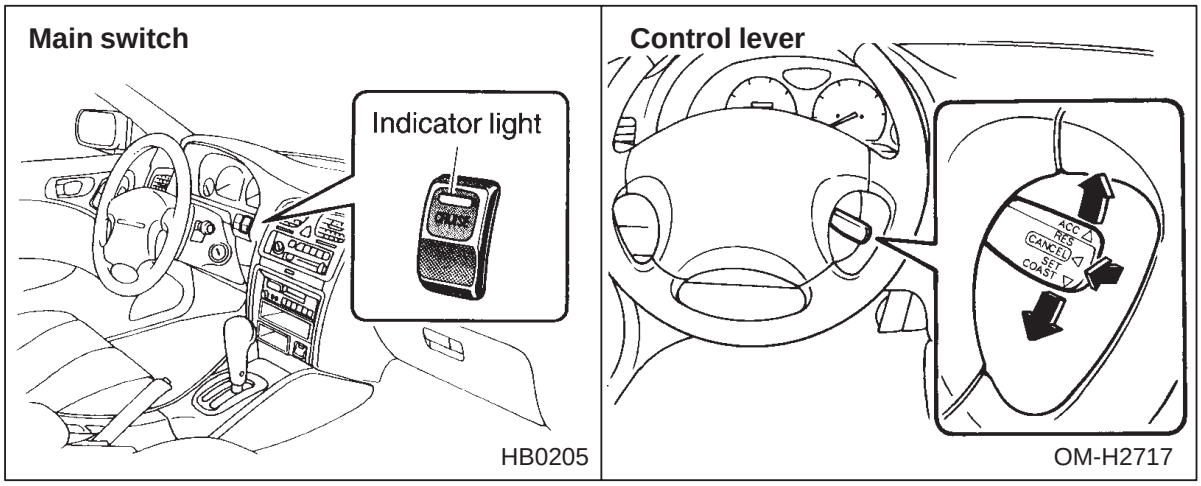

1. Push the “CRUISE” main switch.
2. Depress the accelerator pedal until the vehicle reaches to the desired speed.
3. Push the control lever downward in the “SET, COAST” direction and

Downloaded from www.Manualslib.com manuals search engine

release it. Then release the accelerator pedal.
The vehicle will maintain the desired speed.

Vehicle speed can be temporarily increased while driving with the cruise control activated. Simply depress the accelerator pedal to accelerate the vehicle. When the accelerator pedal is released, the vehicle will return to and maintain the previous cruising speed.

■ To temporarily cancel the cruise control

There are four ways to cancel the cruise control temporarily:

- Depress the brake pedal.
- Pull the control lever in the “CANCEL” direction.
- Depress the clutch pedal (manual transmission vehicles only).
- Shift the selector lever into the “N” position (automatic transmission vehicles only).

To resume the cruise control after it has been temporarily canceled and with vehicle speed of 25 mph (40 km/h) or more, push the control lever upward in the “ACCEL, RESUME” direction to return to the original cruising speed automatically.

■ To turn off the cruise control

There are two ways to turn off the cruise control:

- Push the main switch again.
- Turn the ignition switch to the “ACC” position (but only when the vehicle is completely stopped).

■ To change the cruising speed

▼ To increase the speed

1. Push the control lever upward in the “ACCEL, RESUME” direction and hold it until the vehicle reaches the desired speed.

   The control lever can be used for increasing the cruising speed slightly. Pressing the control lever upward in the “ACCEL, RESUME” direction increases the vehicle speed about 1 mph (1.6 km/h). Press the control lever repeatedly until the desired speed is reached.

OR

– CONTINUED –

Downloaded from www.Manualslib.com manuals search engine

1. Depress the accelerator pedal to accelerate the vehicle to the desired speed.
2. Push the control lever downward in the “SET, COAST” direction once. Now the desired speed is set and the vehicle will keep running at that speed without depressing the accelerator pedal.

▼ To decrease the speed

1. Push the control lever downward in the “SET, COAST” direction and hold it until the vehicle reaches the desired speed.

The control lever can be used for decreasing the cruising speed slightly. Pressing the control lever downward in the “SET, COAST” direction decreases the vehicle speed about 1 mph (1.6 km/h). Press the control lever repeatedly until the desired speed is reached.

OR

1. Depress the brake pedal to release cruise control temporarily.
2. When the speed decreases to the desired speed, press the control lever downward in the “SET, COAST” direction once. Now the desired speed is set and the vehicle will keep running at that speed without depressing the accelerator pedal.

Hill holder (for manual transmission — if equipped)

⚠ CAUTION

The Hill Holder is a device only for helping the driver to START the vehicle on an uphill grade. To prevent accidents when the vehicle is parked on a slope, be sure to firmly set the parking brake. When setting the parking brake, make sure that the vehicle remains stationary when the clutch pedal is released.

The hill holder is a device to make starting on an uphill grade easier.

Downloaded from www.Manualslib.com manuals search engine

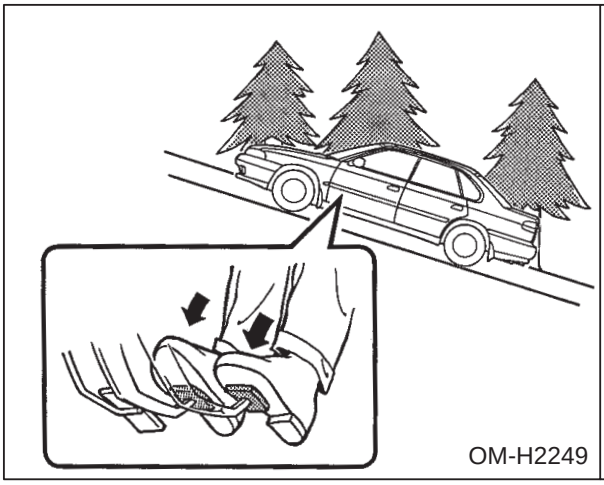

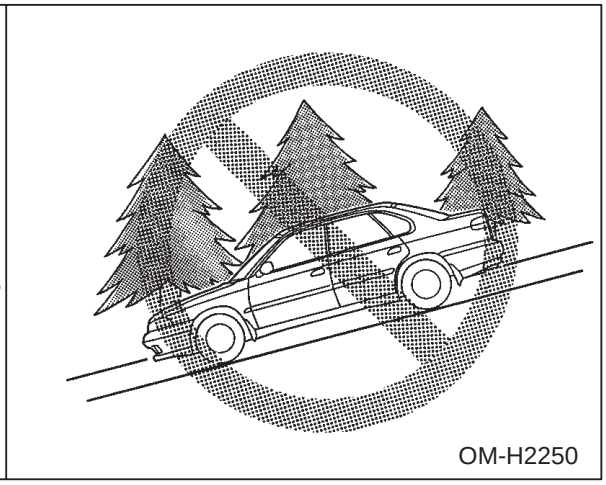

On an uphill grade, when the clutch pedal is depressed while the brake pedal is also depressed, braking power is maintained temporarily by the Hill Holder when the brake pedal is released. The driver is therefore able to start the vehicle the same way as on a level grade, just using the clutch and accelerator pedal.

The hill holder does not operate when the vehicle is facing downhill. And the hill holder may not operate on slight grades.

When starting in reverse and using the Hill Holder, a braking effect may be felt even after the brake pedal has been released. However, this braking effect should disappear once the clutch pedal is released.

A slight jolt may be felt when the vehicle begins to move forward after being reversed.

If the braking power of the Hill Holder is insufficient after the brake pedal is released, apply more braking power by pressing the brake pedal again.

■ Manual release

If the vehicle cannot be moved (because it is impossible to release the hill holder) due to a malfunctioning of the hill holder:

1. Apply the parking brake and stop the engine.

– CONTINUED –

Downloaded from www.Manualslib.com manuals search engine

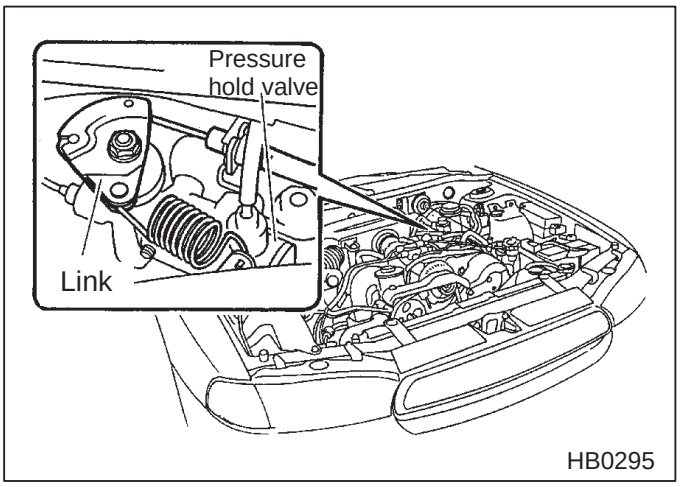

2. Find the Pressure Hold Valve. It is located inside the engine compartment under the brake fluid reservoir (big yellow cap).

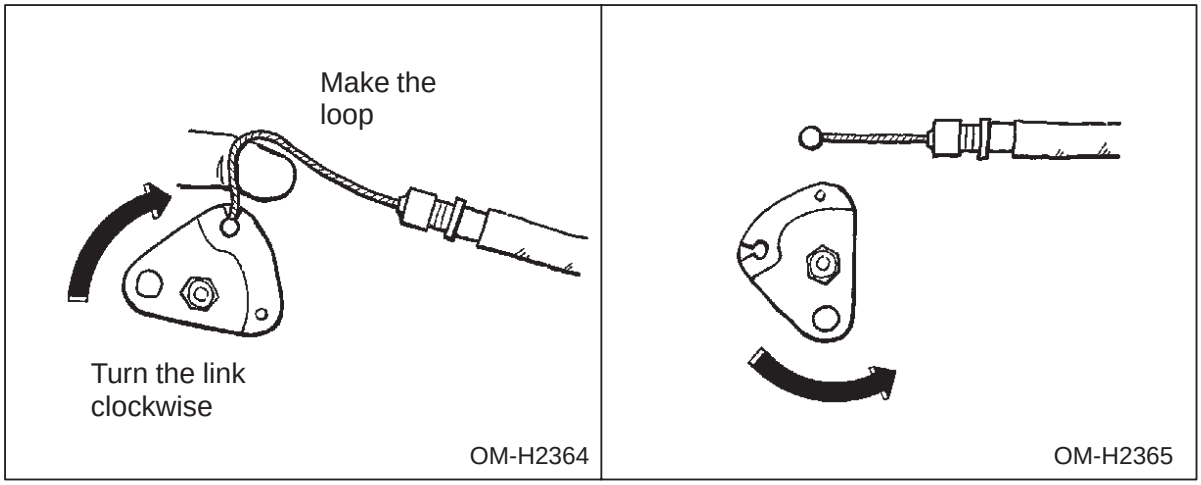

3. Turn the link clockwise to loosen the wire enough to form a loop.
4. Pull the wire out of its housing (by lifting with your finger).
5. Turn the link counterclockwise as far as possible. The device is now inoperative and the vehicle can be moved.

Consult your nearest SUBARU dealer for repairs.

Downloaded from www.Manualslib.com manuals search engine

Parking your vehicle

■ Parking brake

⚠ CAUTION

Never drive while the parking brake is set because this will cause unnecessary wear on the brake linings. Before starting to drive, always make sure that the parking brake has been fully released.

To set the parking brake, press the brake pedal firmly and hold it down while fully pulling up the parking brake lever.

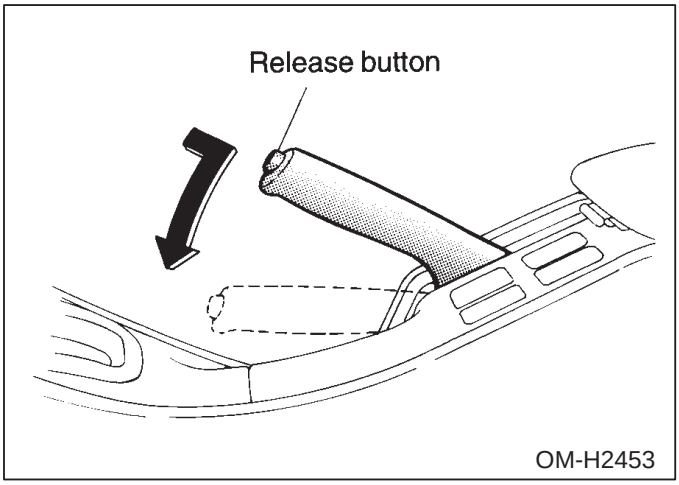

To release the parking brake, pull the lever up slightly, press the release button, then lower the lever while keeping the button pressed.

When the parking brake is set while the engine is running, the parking brake warning light comes on. After starting the vehicle, be sure that the warning light has gone out before the vehicle is driven. Refer to Warning and Indicator Lights section (Chapter 3).

– CONTINUED –

Downloaded from www.Manualslib.com manuals search engine

■ Parking tips

⚠ WARNING

- **Never leave unattended children or pets in the vehicle. They could accidentally injure themselves or others through inadvertent operation of the vehicle. Also, on hot or sunny days, the temperature in a closed vehicle could quickly become high enough to cause severe or possibly fatal injuries to them.**
- **Do not park the vehicle over flammable materials such as dry grass, waste paper or rags, as they may burn easily if they come near hot engine or exhaust system parts.**
- **Be sure to stop the engine if you take a nap in the vehicle. If engine exhaust gas enters the passenger compartment, occupants in the vehicle could die from carbon monoxide (CO) contained in the exhaust gas.**

When parking your vehicle, always set the parking brake firmly and put the shift lever in the “1” (1st) for an upgrade or “R” (Reverse) for a downgrade for manual transmission vehicles, or in the “P” (Park) position for automatic transmission vehicles.

Always set the parking brake firmly when parking your vehicle. Never rely on the transmission alone to hold the vehicle.
For better parking brake power, depress the brake pedal firmly while setting the parking brake.

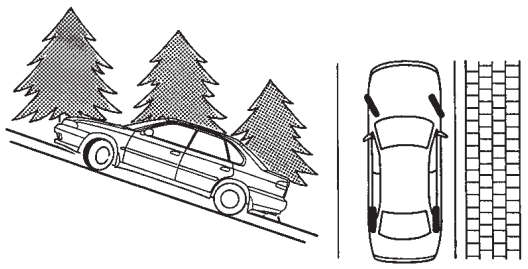

OM-H2252

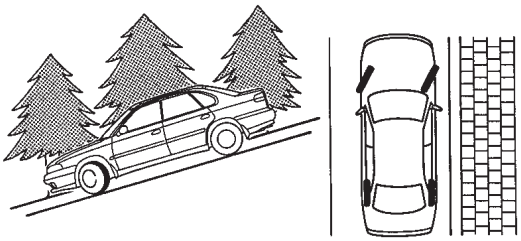

OM-H2253

Downloaded from www.Manualslib.com manuals search engine

When parking on a hill, always turn the steering wheel. When the vehicle is headed up the hill, the front wheels should be turned away from the curb. When facing downhill, the front wheels should be turned into the curb.

Tips for using the brakes

■ Braking tips

⚠ WARNING

Never rest your foot on the brake pedal while driving. This can cause dangerous overheating of the brakes and needless wear on the brake pads and linings.

▼ When the brakes get wet

When driving in rain, in puddle or after washing the vehicle, the brakes may get wet. As a result, brake stopping distance will be longer. To dry the brakes, drive the vehicle at a safe speed while lightly depressing the brake pedal to heat up the brakes.

▼ Use of engine braking

Remember to make use of engine braking in addition to foot braking. When descending a grade, if only the foot brake is used, the brakes may start working improperly because of brake fluid overheating, caused by overheated brake pads. To help prevent this, shift into a lower gear.

▼ Braking when a tire is punctured

Do not depress the brake pedal suddenly when a tire is punctured. This could cause a loss of control of the vehicle. Keep driving straight ahead while gradually reducing speed. Then slowly pull off the road to a safe place.

– CONTINUED –

Downloaded from www.Manualslib.com manuals search engine

■ Brake system

▼ Two separate circuits

Your vehicle has two separate circuit brake systems. Each circuit works diagonally across the vehicle. If one circuit of the brake system should fail, the other half of the system still works. If one circuit fails, the brake pedal will goes down much closer to the floor than usual and you need to press it down much harder. And a much longer distance will be needed to stop the vehicle.

▼ Brake booster

The brake booster uses engine manifold vacuum to assist braking force. Do not turn off the engine while driving because that will turn off the brake booster, resulting in poor braking power.
The brakes will continue to work even when the brake booster completely stops functioning. If this happens, however, you will have to push the pedal much harder than normal and the braking distance will increase.

■ Disc brake pad wear warning indicators

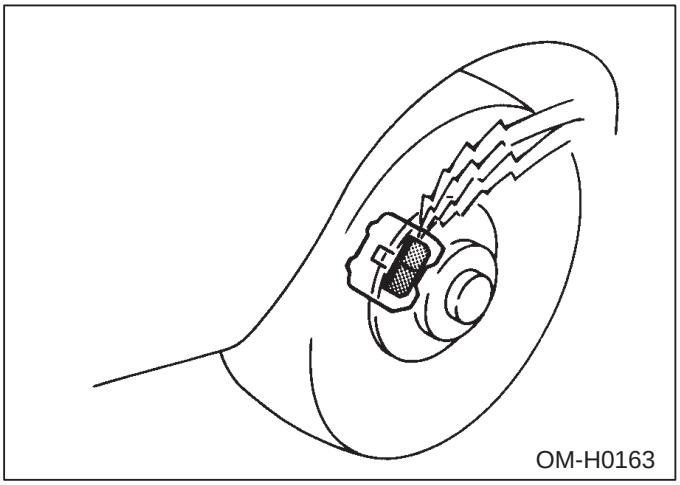

The disc brake pad wear warning indicators on the disc brakes give a warning noise when the brake pads are worn.
If a squeaking or scraping noise is heard from the disc brakes while braking, immediately have your vehicle checked by your SUBARU dealer.

Downloaded from www.Manualslib.com manuals search engine

■ ABS (Anti-Lock Brake System) (if equipped)

⚠ WARNING

Always use the utmost care in driving – overconfidence because you are driving with an ABS equipped vehicle could easily lead to a serious accident.

⚠ CAUTION

- **ABS system does not always decrease stopping distance. You should always maintain a safe following distance from other vehicle.**
- **When driving on badly surfaced roads, gravel roads, icy roads, or over deep newly fallen snow, stopping distances may be longer for a vehicle with the ABS system than one without. When driving under these conditions, therefore, reduce your speed and leave ample distance from other vehicles.**
- **When you feel the ABS system operating, you should maintain constant brake pedal pressure. Do not pump the brake pedal since doing so may defeat the operation of the ABS system.**

The ABS system prevents the lock-up of wheels which may occur during sudden braking or braking on slippery road surfaces. This helps prevent the loss of steering control and directional stability caused by wheel lock-up.

When the ABS system is operating, you may hear a chattering noise or feel a slight vibration in the brake pedal. This is normal when the ABS operates.

The ABS system will not operate when the vehicle speed is below approximately 6 mph (10 km/h).

▼ ABS system self-checking

You may feel a slight shock in the brake pedal and hear the operating sound of ABS from the engine compartment just after the vehicle is started. These are caused by an automatic functional test of the ABS

– CONTINUED –

Downloaded from www.Manualslib.com manuals search engine

system being carried out and does not indicate any abnormal condition.

▼ ABS warning light

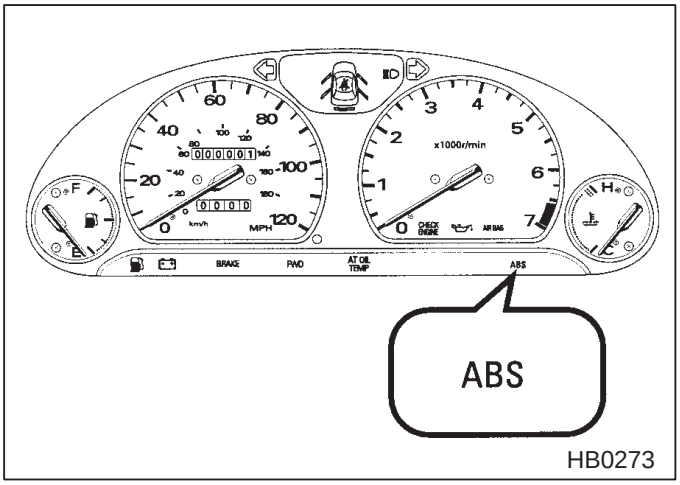

The ABS warning light comes on when the ignition switch is turned to the “ON” position and goes out after about two seconds.
This is an indication that the ABS system is working properly.
If the warning light behaves as follows, ABS system may not work properly.

- The warning light does not come on when the ignition switch is turned to the “ON” position.
- The warning light comes on when the ignition switch is turned to the “ON” position, but it does not go out even when the vehicle speed exceeds approximately 8 mph (12 km/h).
- The warning light comes on during driving.

When the warning light is on, the ABS function shuts down; however, the conventional brake system continues to operate normally. If this occurs, have the ABS system repaired at the first available opportunity by your SUBARU dealer.

NOTE
If the warning light behavior is as shown below, the ABS system may be considered normal.
- The warning light comes on right after the engine is started but goes out immediately, remaining off.

Downloaded from www.Manualslib.com manuals search engine

- The warning light remains on after the engine has been started, but it goes out when the vehicle speed reaches about 8mph (12km/h).
- The warning light comes on during driving, but it goes out immediately and remains off.

When driving with an insufficient battery voltage such as when the engine is jump started, the ABS warning light may come on. This is due to the low battery voltage and does not indicate a malfunction. When the battery becomes fully charged, the light will go out.

Driving tips for AWD vehicles

⚠ WARNING

- **Always maintain a safe driving speed according to the road and weather conditions in order to avoid having an accident on a sharp turn, during sudden braking or under other similar conditions.**
- **Always use the utmost care in driving – overconfidence because you are driving an all wheel drive vehicle could easily lead to a serious accident.**

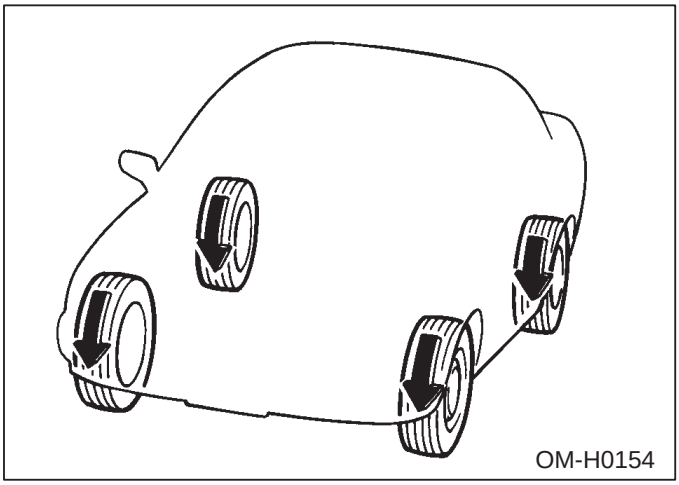

All wheel drive distributes the engine power to all four wheels. AWD vehicles provide better traction when driving on slippery, wet or snow-

– CONTINUED –

Downloaded from www.Manualslib.com manuals search engine

covered roads and when moving out of mud, dirt and sand. By shifting power between the front and rear wheels, SUBARU AWD can also provide added traction during acceleration, and added engine braking force during deceleration.
Therefore, your SUBARU AWD vehicle may handle differently than an ordinary two wheel drive vehicle and it contains some features unique to AWD. For safety purposes as well as to avoid damaging the AWD system, you should keep the following tips in mind:

- An AWD vehicle is better able to climb steeper roads under snowy or slippery conditions than a two wheel drive vehicle. There is little difference in handling, however, during extremely sharp turns or sudden braking. Therefore, when driving down a slope or turning corners, be sure to reduce your speed and maintain an ample distance from other vehicles.
- When replacing a tire, make sure you use only the same size, construction, brand, and load range as the original tires listed on the tire placard. Using other sizes or construction may result in severe mechanical damage to the drive train of your vehicle and may affect ride, handling, braking, speedometer/odometer calibration, and clearance between the body and tires. It also may be dangerous and lead to loss of vehicle control.
- If you use a temporary spare tire to replace a flat tire, be sure to use the original temporary spare tire stored in the vehicle. Using other sizes may result in severe mechanical damage to the drive train of your vehicle.
- Always check the cold tire pressure before starting to drive. The recommended tire pressure is provided on the tire placard, which is located under the door latch on the driver's side.
- Tire chains should always be placed on the front wheels only.
- There are some precautions that you must observe when towing your vehicle. For detail information, see the Towing section in chapter 8.

Off road driving

⚠ WARNING

- **Always maintain a safe driving speed according to the road and weather conditions in order to avoid having an accident on a**

Downloaded from www.Manualslib.com manuals search engine

sharp turn, during sudden braking or under other similar conditions.

● Always use the utmost care in driving – overconfidence because you are driving an all wheel drive vehicle could easily lead to a serious accident.

■ All AWD models except OUTBACK and SUS

Your AWD vehicle is neither a conventional off-road vehicle nor an all terrain vehicle. It is a passenger car designed primarily for on-road use. The AWD feature gives it some limited off-road capabilities in situation in which driving surfaces a relatively level, obstruction-free and otherwise similar to on-road driving conditions. Operating it under other than those conditions could subject the vehicle to excessive stress which might result in damage not eligible for repair under warranty. If you do take your SUBARU off road, you should review the common sense precautions in the next section (applicable to the OUTBACK and SUS) for general guidance. But please keep in mind that your vehicle's off-road capabilities are more limited than those of the OUTBACK and SUS.

■ OUTBACK and SUS

Because of the AWD feature and higher ground clearance, your Subaru can be driven on ordinary roads or off-road. But please keep in mind that an AWD Subaru is a passenger car and is neither a conventional off-road vehicle nor an all-terrain vehicle. If you do take your Subaru off-road, certain common sense precautions such as the following should be taken:

● Make certain that you and all of your passengers are wearing seat belts.

● Carry some emergency equipment, such as a towing rope or chain, a shovel, wheel blocks, first aid kit and portable phone or citizens band radio.

● Drive carefully. Do not take unnecessary risks by driving in dangerous areas or over rough terrain.

● Slow down and employ extra caution at all times. When driving off-road, you will not have the benefit of marked traffic lanes, banked curves, traffic signs and the like.

– CONTINUED –

Downloaded from www.Manualslib.com manuals search engine

- Do not drive across steep slopes. Instead, drive either straight up or straight down the slopes. A vehicle can much more easily tip over sideways than it can when moving forward or backward. Avoid driving straight up or down slopes that are too steep.
- Avoid sharp turning maneuvers, especially at higher speeds.
- Do not grip the inside or spokes of the steering wheel. A bad bump could jerk the wheel and injure your hands. Instead drive with your fingers and thumbs on the outside of the rim.
- If driving through water, such as when crossing shallow streams, first check the depth of the water and the bottom of the stream bed for firmness and ensure that the bed of the stream is flat. Drive slowly and completely through the stream. The water should be shallow enough that it does not reach the vehicle's undercarriage. Water entering the engine air intake or the exhaust pipe or water splashing onto electrical parts may damage your vehicle and may cause it to stall. Never attempt to drive through rushing water; regardless of its depth, it can wash away the ground from under your tires, resulting in possible loss of traction and even vehicle rollover.
- Always check your brakes for effectiveness immediately after driving in sand, mud or water. Do this by driving slowly and stepping on the brake pedal. Repeat that process several times to dry out the brake discs and brake pads.
- Do not drive or park over or near flammable materials such as dry grass or fallen leaves, as they may burn easily. The exhaust system is very hot while engine is running and right after engine stops. This could create a fire hazard.
- After driving through tall grass, mud, rock, sand, rivers, etc., check that there is no grass, bush, paper, rags, stones, sand, etc. adhering to or trapped on the underbody. Clear off any such matter from the underbody. If the vehicle is used with these materials trapped or adhering to the underbody, a mechanical breakdown or fire could occur.
- Secure all cargo carried inside the vehicle and make certain that it is not piled higher than the seatbacks. During sudden stops or jolts, unsecured cargo could be thrown around in the vehicle and cause injury. Do not pile heavy loads on the roof. Those loads raise the vehicle's center of gravity and make it more prone to tip over.

Downloaded from www.Manualslib.com manuals search engine

- If you must rock the vehicle to free it from sand or mud, depress the accelerator pedal slightly and move the selector lever back and forth between “D” and “R” repeatedly. Do not race the engine. For the best possible traction, avoid spinning the wheels when trying to free the vehicle.
When the road surface is extremely slippery, you can obtain better traction by starting the vehicle with the transmission in 2nd than 1st (both for MT and AT).
- Never equip your vehicle with tires larger than those specified in this manual.
- Frequent driving of an AWD vehicle under hard-driving conditions such as rough roads or off roads will necessitate more frequent replacement of engine oil, brake fluid and transmission oil than that specified in the maintenance schedule described in the Warranty and Maintenance Booklet.

Remember that damage done to your Subaru while operating if off-road and not using common sense precautions such as those listed above is not eligible for warranty coverage.

Winter driving

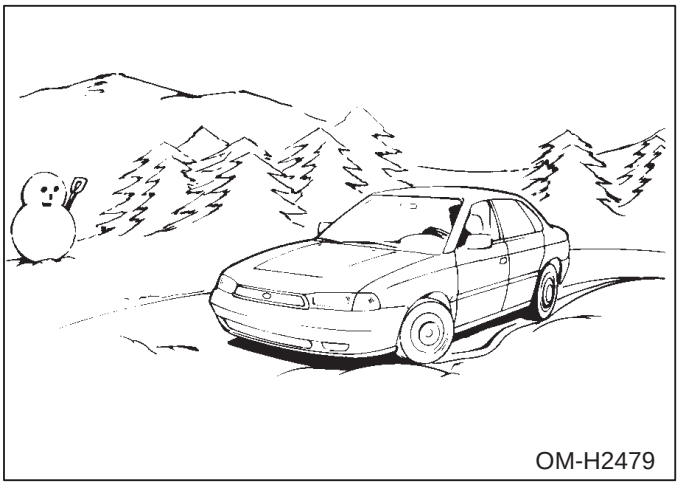

■ Operation during cold weather

Carry some emergency equipment, such as tire chains, a window scraper, a bag of sand, flares, a small shovel, and jumper cables.

Check the battery and cables. Cold temperatures reduce battery capacity. The battery must be in good condition to provide enough power for

– CONTINUED –

Downloaded from www.Manualslib.com manuals search engine

cold winter starts.

Use an engine oil of proper grade and viscosity for cold weather. Heavy summer oil will cause harder starting.

Keep the door locks from freezing by squirting them with deicer or glycerin.

Forcing a frozen door open may damage or separate the rubber weather strips around the door. If the door is frozen, use hot water to melt the ice, and afterwards thoroughly wipe the water away.

Use a windshield washer fluid that contains an antifreeze solution. Do not use engine antifreeze or other substitutes because they may damage the paint of the vehicle.

▼ Before driving your vehicle

Before entering the vehicle, remove any snow or ice from your shoes because that could make the pedals slippery and dangerous.

While warming up the vehicle before driving, check that the accelerator pedal, brake pedal, and all other controls operate smoothly.
Clear away ice and snow that has accumulated under the fenders to avoid making steering difficult. During severe winter driving, stop when and where it is safe to do so and check under the fenders periodically.

▼ Parking in cold weather

⚠ WARNING

Snow can trap dangerous exhaust gases under your vehicle. Keep snow clear of the exhaust pipe and from around your vehicle if you park the vehicle in snow with the engine running.

Do not use the parking brake when parking for long periods in cold weather since it could freeze in that position. Instead, observe the following:

1. Place the shift lever in “1” or “R” for manual transmission vehicles, and in “P” for automatic transmission vehicles.

Downloaded from www.Manualslib.com manuals search engine

2. Use tire stops under the tires to prevent the vehicle from moving.

When the vehicle is parked in snow or when it snows, raise the wiper blades off the glass to prevent damage to them.

When the vehicle has been left parked after use on roads heavily covered with snow, or has been left parked during a snowstorm, icing may develop on the brake system, which could cause poor braking action. Check for snow buildup or ice on the suspension, disc brakes and brake hoses underneath the vehicle.
If there is caked snow or ice, remove it, being careful not to damage the disc brakes and brake hoses and ABS harness.

▼ Refueling in cold weather

To help prevent moisture from forming in the fuel system and the risk of its freezing, use of an antifreeze additive in the fuel tank is recommended during cold weather.
Use only additives that are specifically designed for this purpose. When an antifreeze additive is used, its effect lasts longer if the tank is refilled whenever the fuel level reaches half empty.

If your SUBARU is not going to be used for an extended period, it is best to have the fuel tank filled to capacity.

■ Driving on snowy and icy roads

⚠ WARNING

Do not use the cruise control on slippery roads such as snowy or icy roads. This may cause loss of vehicle control.

To prevent skidding and slipping, avoid sudden braking, abrupt acceleration, high-speed driving, and sharp turning when driving on snowy or icy roads.
Always maintain ample distance between your vehicle and the vehicle ahead of you to avoid the need for sudden braking.
Use the engine brake effectively to control the vehicle speed. (Shift into a lower gear when necessary.)
Avoid locking the front wheels because that can lead to a loss of steering

– CONTINUED –

Downloaded from www.Manualslib.com manuals search engine

control. When braking with a vehicle not equipped with an Anti-Lock Brake system (ABS), press the brake pedal repeatedly at short intervals to prevent the wheels from locking. Then apply the brakes softly to bring the vehicle to a stop.

An Anti-Lock Brake System (ABS) enhances your vehicle's braking performance on snowy and icy roads. Refer to ABS (Anti-Lock Brake System) in this chapter for information on braking on slippery surfaces in ABS equipped vehicle.

▼ Wiper operation when snowing

Before driving in cold weather, make sure the wiper blades are not frozen to the windshield or rear window. If the wiper blades are frozen to the windshield or rear window, defrost them completely with the airflow control button in the "" position and the temperature control lever set in the maximum until the wiper blades are completely thawed out. If your vehicle is equipped with a wiper deicer, it is helpful to thaw the windshield wiper blades. To thaw out the rear wiper blade, use the rear window defogger.

When driving in snow, if frozen snow starts to stick on the surface of the windshield despite wiper operation, use the defroster with the airflow control button in the "" position and the temperature control lever set in the maximum. After the windshield gets warmed enough to melt the frozen snow on it, wash it away using the windshield washer.

Snow stuck on the wiper arm prevents the wiper from working effectively. If snow is stuck on the wiper arm, pull off the road to a safe place, then remove it. If you stop the car at the side of the road, use the hazard warning flasher to alert other drivers.

We recommend use of non-freezing type wiper blades during the seasons you could have snow falling and sub-zero temperature.

Downloaded from www.Manualslib.com manuals search engine

■ Snow tires

⚠ WARNING

- **When replacing a tire, make sure you use only the same size, construction, brand, and load range as the original tires listed on the tire placard. Using other sizes or construction may result in severe mechanical damage to the drive train of your vehicle and may affect ride, handling, braking, speedometer/odometer calibration, and clearance between the body and tires. It also may be dangerous and lead to loss of vehicle control.**
- **Do not use a combination of radial, belted bias or bias tires since it may cause dangerous handling characteristics and lead to an accident.**

Your vehicle is equipped with “all season tires” which are designed to provide an adequate measure of traction, handling and braking performance in year-round driving. In winter, it may be possible to enhance performance through use of tires designed specifically for winter driving conditions.

If you choose to install winter tires on your vehicle, be sure to use the correct tire size and type. All four tires should be of the same size, construction, brand and load range and you should never mix radial, belted bias or bias tires since this may result in dangerous handling characteristics.

Remember to drive with care at all times regardless of the type of tires on your vehicle.

■ Tire chains

⚠ CAUTION

Tire chains cannot be fitted with P205/55R16 tires for GT models because of lack of clearance between the tires and body.

Driving on snowy grades or icy roads may require the use of tire chains, in which case put the chains on the front wheels only. Use only SAE class S type chains that are of the correct size for your tires so as not to

– CONTINUED –

Downloaded from www.Manualslib.com manuals search engine

damage the vehicle body or suspension.
When driving with tire chains, drive at speeds below 19 mph (30 km/h).

When a temporary spare tire is on a front wheel, replace the temporary spare tire with the rear tire on the same side of the vehicle, and then fit chains on the front tires.
Always use the utmost care when driving with tire chains — overconfidence because you are driving with tire chains could easily lead to a serious accident.

■ Rocking the vehicle

If you must rock the vehicle to free it from snow, sand, or mud, depress the accelerator pedal slightly and move the selector lever back and forth between “D” and “R” repeatedly. Do not race the engine. For the best possible traction, avoid spinning the wheels when trying to free the vehicle.

When the road surface is extremely slippery, you can obtain better traction by starting the vehicle with the transmission in 2nd than 1st (both for MT and AT).

Refer to the Automatic Transmission section in this chapter for information on holding the transmission in 2nd position.

■ Corrosion protection

Refer to Corrosion Protection section (chapter 9).

Loading your vehicle

⚠ WARNING

- **Never allow passengers to ride on the folded rear seatback, in the trunk or in the cargo area. Doing so may result in serious injury.**
- **Never stack luggage or other cargo higher than the top of the seatback because it could tumble forward and injure passengers in the event of a sudden stop or accident. Keep luggage or cargo low, as close to the floor as possible.**

Downloaded from www.Manualslib.com manuals search engine

- **When you carry something inside the vehicle, secure it whenever you can to prevent it from being thrown around inside the vehicle during sudden stops, sharp turns or in an accident.**
- **Do not pile heavy loads on the roof. These loads raise the vehicle's center of gravity and make it more prone to tip over.**
- **Secure skis and other lengthy items properly to prevent them from shooting forward and causing serious injury during a sudden stop.**
- **Never exceed the maximum load limit. If you do, some parts on your vehicle can break, or it can change the way your vehicle handles. This could result in loss of control and cause personal injury. Also, overloading can shorten the life of your vehicle.**
- **Do not place anything on the rear shelf behind the rear seatback (for Sedan) or the extended luggage cover (for wagon). Such items could tumble forward in the event of a sudden stop or a collision. This could cause serious injury.**

⚠ CAUTION

Do not carry spray cans, containers with flammable or corrosive liquids or any other dangerous items inside the vehicle.

■ Vehicle capacity weight

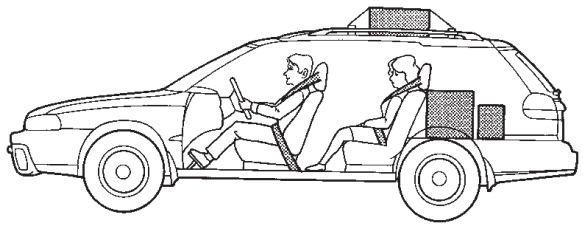

HB0293

Tire information label

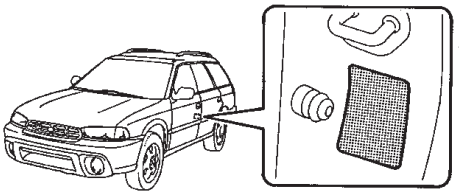

HB0338

The load capacity of your vehicle is determined by weight, not by avail-

– CONTINUED –

Downloaded from www.Manualslib.com manuals search engine

able cargo space. The maximum load you can carry in your vehicle is shown as the Vehicle Capacity Weight on the tire information label attached to the driver's side door jamb. It includes the total weight of driver and all passengers and their belongings, any optional equipment such as a trailer hitch, roof rack or bike carrier, etc., and the tongue load of a trailer.

■ GVWR and GAWR (Gross Vehicle Weight Rating and Gross Axle Weight Rating)

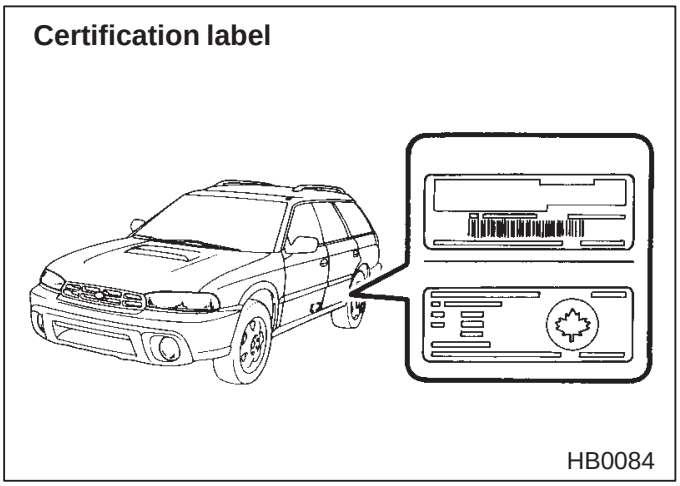

The certification label attached to the driver's side door shows GVWR (Gross Vehicle Weight Rating) and GAWR (Gross Axle Weight Rating).
The GVW (Gross Vehicle Weight) must never exceed the GVWR. GAW is the combined total of weight of the vehicle, fuel, driver, all passengers, luggage, any optional equipment and trailer tongue load. Therefore, the GVW changes depending on the situation. The GVWR equals Curb Weight (actual weight of your vehicle – including standard equipment, fluids, emergency tools and spare tire assembly) plus the vehicle capacity weight.

In addition, the total weight applied to each axle (GAW) must never exceed the GVWR. The front and rear GAWs can be adjusted by relocating luggage inside the vehicle.
Even if the total weight of your luggage is lower than the vehicle capacity weight, either front or rear GAW may exceed the GAWR, depending on the distribution of the luggage.

Downloaded from www.Manualslib.com manuals search engine

If you carry heavy loads in the vehicle, you should confirm that GVW and front and rear GAWs are within the GVWR and GAWR by putting your vehicle on a vehicle scale, found at a commercial weighing station.

Do not use replacement tires with a lower load range than the originals because they may lower the GVWR and GAWR limitations. Replacement tires with a higher load range than the originals do not increase the GVWR and GAWR limitations.

NOTE
For better fuel economy, do not carry unneeded cargo.

Trailer towing (for all vehicles except OUTBACK and SUS)

Your car is designed and intended to be used primarily as a passenger-carrying vehicle. Towing a trailer puts additional loads on your car's engine, drive train, brakes, tires and suspension and has an adverse effect on fuel economy.
If you do decide to tow a trailer, your safety and satisfaction depend upon proper use of correct equipment and cautious operation of your vehicle. Seek the advice of a professional trailer and/or hitch supplier to assist you in purchasing a hitch and other necessary towing equipment appropriate for your vehicle. In addition, be sure to follow the instructions on correct installation and use provided by the trailer and other towing equipment manufacturers.
SUBARU assumes no responsibility for injuries or vehicle damage that result from trailer towing equipment, or from any errors or omissions in the instructions accompanying such equipment or for your failure to follow the proper instructions.

■ Warranties and maintenance

SUBARU warranties do not apply to vehicle damage or malfunction caused by trailer towing. If you use your vehicle to tow a trailer, more frequent maintenance will be required due to the additional load.
Under no circumstances should a trailer be towed with a new vehicle or a vehicle with any new power train component (engine, transmission, differential, wheel bearings, etc.) for the first 1,000 miles (1,600 km) of driving.

– CONTINUED –

Downloaded from www.Manualslib.com manuals search engine

■ Maximum load limits

⚠ CAUTION

Never exceed the maximum load limits explained below. Exceeding the maximum load limits could cause personal injury and/or vehicle damage.

The total trailer weight (trailer weight plus its cargo weight) with brakes must never exceed 2,000 lbs (907 kg).

The Gross Vehicle Weight (i.e., the combined weight of vehicle, driver, passengers, luggage, trailer hitch, trailer tongue load and any other optional equipment installed on your vehicle) must never exceed the Gross Vehicle Weight Rating (GVWR).
GVWR is shown on the certification label located on the driver's door of your vehicle.

The total weight applied to each axle must never exceed the Gross Axle Weight Rating (GAWR). The front and rear GAWR are also shown on the certification label.
The maximum trailer tongue load must never exceed 165 lbs. (75 kg). The tongue load can be adjusted by proper distribution of the load in the trailer. Never load the trailer with more weight in the back than the front; approximately 60 percent of the trailer load should be in the front and approximately 40 percent in the rear. Also, distribute the load as evenly as possible on both the left and right sides.

To check both GVWR and GAWR and to confirm that the total weight and weight distribution are within safe driving limits, you should have your vehicle and trailer weighed at a commercial weighing station.
Be sure that all cargo is firmly secured to prevent a change in weight distribution while driving.

Downloaded from www.Manualslib.com manuals search engine

■ Trailer hitches

⚠ WARNING

Never drill the frame or under-body of your vehicle to install a commercial trailer hitch. If you do, dangerous exhaust gas, water or mud may enter into the passenger compartment through the drilled hole. Exhaust gas contains carbon monoxide, a colorless and odorless gas which is dangerous, or even lethal, if inhaled. Also, drilling the frame or under-body of your vehicle could cause deterioration of strength of your vehicle and cause corrosion around the drilled hole.

⚠ CAUTION

- **Do not modify the vehicle exhaust system, brake system, or other system when installing a hitch or other trailer towing equipment.**
- **Adequate size trailer brakes are required when the trailer and its cargo exceed 1,000 lbs (453 kg) total weight.**

Choose a proper hitch for your vehicle and trailer. SUBARU does not offer accessory trailer hitches. Consult with a professional hitch supplier to assist you in choosing an appropriate hitch for your vehicle. Be sure to follow all of the hitch manufacturer's instructions for installation and use.

■ Side mirrors

After hitching a trailer to your vehicle, check that the standard side mirrors provide a good rearward field of view without significant blind spots. If significant blind spots occur with the vehicle's standard side mirrors, use towing mirrors that conform with Federal, state/province and/or other applicable regulations.

– CONTINUED –

Downloaded from www.Manualslib.com manuals search engine

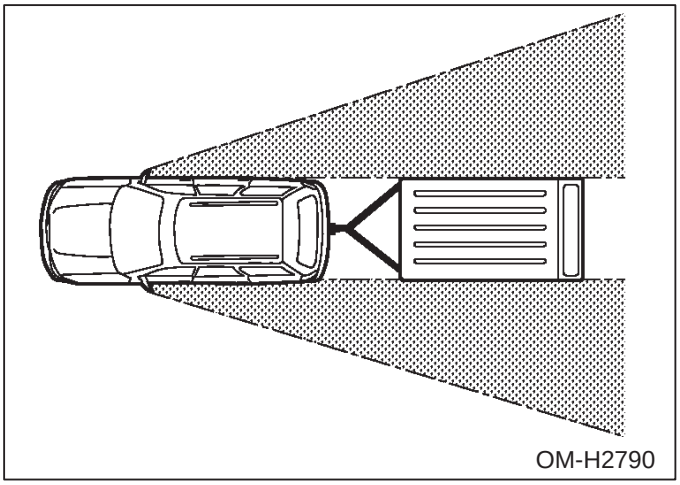

■ Trailer lights

⚠ CAUTION

Direct splicing or other improper connection of trailer lights may damage your vehicle's electrical system and cause a malfunction of your vehicle lighting system.

Consult your authorized SUBARU dealer concerning the connection of wires for trailer lights. Check for correct operation of the turn signals and brake lights each time you hitch up.

■ Tires

⚠ WARNING

Never tow a trailer when the temporary spare tire is used. The temporary spare tire is not designed to sustain the towing load. Use of the temporary spare tire when towing can result in failure of the spare tire and/or less stability of the vehicle and may lead to an accident.

Make sure that all the tires on your vehicle are inflated to the pressure specified on the tire placard located on the left center pillar of your vehicle. Trailer tire condition, size, load rating and proper inflation pressure should be in accordance with the trailer manufacturer's specifications.

Downloaded from www.Manualslib.com manuals search engine

In the event your vehicle gets a flat tire when towing a trailer, ask a commercial road service to repair the flat tire.

If you carry a regular size spare tire in your vehicle or trailer as a precaution against getting a flat tire, be sure that the spare tire is firmly secured.

■ Trailer towing tips

When towing a trailer, steering, stability, stopping distance and braking performance will vary from normal operation. For safety's sake, you should employ extra caution when towing a trailer and you should never speed.
You should also keep the following tips in mind:

Sufficient time should be taken to learn the "feel" of the vehicle/trailer combination before starting out on a trip. In an area free of traffic, practice turning, stopping and backing up.

You should allow for considerably more stopping distance when towing a trailer. Avoid sudden braking because it may result in skidding or jackknifing and loss of control.

Avoid abrupt starts and sudden accelerations. If your vehicle has a manual transmission, always start out in first gear and release the clutch at moderate engine RPM.

Avoid uneven steering, sharp turns and rapid lane changes.
Slow down before turning. Make a longer than normal turning radius because the trailer wheels will be closer than the vehicle wheels to the inside of the turn. In a tight turn, the trailer could hit your vehicle.

Crosswinds will adversely affect the handling of your vehicle and trailer, causing sway. Crosswinds can be due to weather conditions or the passing of large trucks or buses. If swaying occurs, firmly grip the steering wheel and slow down immediately but gradually.

When passing other vehicles, considerable distance is required because of the added weight and length caused by attaching a trailer to your vehicle.

Before going down a steep hill, slow down and shift into low gear in order to utilize the engine braking effect and prevent overheating of your

– CONTINUED –

Downloaded from www.Manualslib.com manuals search engine

vehicle's brakes. Do not make sudden downshifts.

When going uphill on hot days, turn off your air conditioner to reduce the possibility of engine overheating caused by the added load of the trailer. Pay attention to your water temperature gauge.

If your vehicle has an automatic transmission, avoid using the accelerator pedal to stay stationary on an uphill slope instead of using the parking brake or foot brake. This may cause the transmission fluid to overheat.

If the ABS warning light illuminates while the vehicle is in motion, stop towing the trailer and have repairs carried out immediately by the nearest SUBARU dealer.

Always block the wheels under both vehicle and trailer when parking. Apply the parking brake firmly. You should not park on a hill or slope. But if parking on a hill or slope cannot be avoided, you should take the following steps:

1. Apply the brakes and hold the pedal down.
2. Have someone place wheel blocks under both the vehicle and trailer wheels.
3. When the wheel blocks are in place, release the regular brakes slowly until the blocks absorb the load.
4. Apply the regular brakes and then apply the parking brake; slowly release the regular brakes.
5. Shift into 1st or reverse gear (manual transmission) or "P" (automatic transmission) and shut off the engine.

Trailer towing (for OUTBACK and SUS)

Your car is designed and intended to be used primarily as a passenger-carrying vehicle. Towing a trailer puts additional loads on your car's engine, drivetrain, brakes, tires and suspension and has an adverse effect on fuel economy.

If you do decide to tow a trailer, your safety and satisfaction depend upon proper use of correct equipment and cautious operation of your vehicle. Seek the advice of your SUBARU dealer to assist you in purchas-

Downloaded from www.Manualslib.com manuals search engine

ing a hitch and other necessary towing equipment appropriate for your vehicle. In addition, be sure to follow the instructions on correct installation and use provided by the trailer and other towing equipment manufacturers.
SUBARU assumes no responsibility for injuries or vehicle damage that result from trailer towing equipment, or from any errors or omissions in the instructions accompanying such equipment or for your failure to follow the proper instructions.

■ Warranties and maintenance

SUBARU warranties do not apply to vehicle damage or malfunction caused by trailer towing. If you use your vehicle to tow a trailer, more frequent maintenance will be required due to the additional load. (Refer to “Maintenance schedule under severe driving conditions” in the Warranty and Maintenance Booklet.)
Under no circumstances should a trailer be towed with a new vehicle or a vehicle with any new powertrain component (engine, transmission, differential, wheel bearings, etc.) for the first 1,000 miles (1,600 kilometers) of driving.

■ Maximum load limits

⚠ WARNING

Never exceed the maximum load limits explained below. Exceeding the maximum load limits could cause personal injury and/or vehicle damage.

⚠ CAUTION

- **Adequate size trailer brakes are required when the trailer and its cargo exceed 1,000 lbs (453 kg) total weight.**
- **Before towing a trailer, check the trailer total weight, GVW, GAWs and tongue load. Make sure the load and its distribution in your vehicle and trailer are acceptable.**

– CONTINUED –

Downloaded from www.Manualslib.com manuals search engine

▼ Total trailer weight

Model	Conditions	Maximum total trailer weight
MT models	When towing a trailer without brakes.	1,000 lbs (453 kg)
	When towing a trailer with brakes.	2,000 lbs (906 kg)
AT models	When towing a trailer without brakes.	1,000 lbs (453 kg)
	When towing a trailer with brakes.	2,000 lbs (906 kg)
	When towing a trailer on a long uphill grade continuously for over 5 miles (8 km) with an outside temperature of 104°F (40°C) or above.	1,000 lbs (453 kg)

Total trailer weight

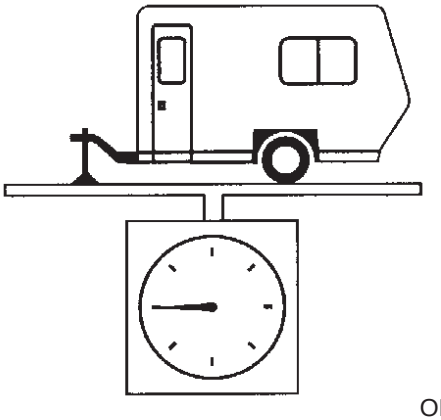

OM-H2781

▼ Gross Vehicle Weight (GVW) and Gross Vehicle Weight Rating (GVWR)

The Gross Vehicle Weight (GVW) must never exceed the Gross Vehicle Weight Rating (GVWR).

Gross Vehicle Weight (GVW) is the combined total of weight of the vehicle, driver, passengers, luggage, trailer hitch, trailer tongue load and any other optional equipment installed on your vehicle. Therefore, the GVW changes depending on the situation. Determine the GVW each time before going on a trip by putting your vehicle and trailer on a vehicle scale.

GVWR is shown on the certification label located on the driver's door

Downloaded from www.Manualslib.com manuals search engine

of your vehicle.

Gross Vehicle Weight	Certification label
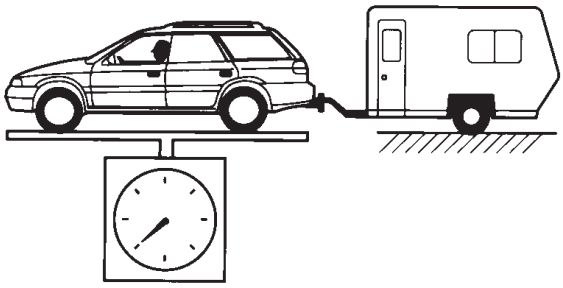 OM-H2782	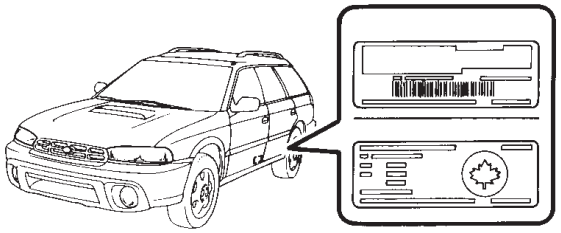 HB0084

▼ Gross Axle Weight (GAW) and Gross Axle Weight Rating (GAWR)

The total weight applied to each axle (GAW) must never exceed the Gross Axle Weight Rating (GAWR). The front and rear GAWs can be adjusted by relocating passengers and luggage inside the vehicle. The front and rear GAWR are also shown on the certification label.

Gross Axle Weight	Certification label
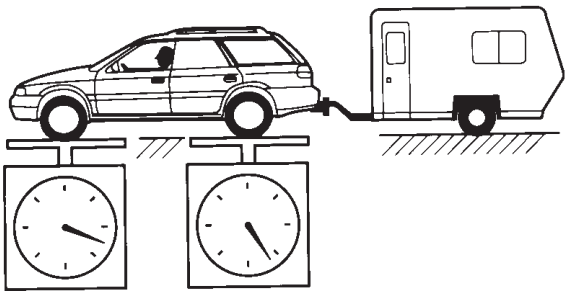 OM-H2784	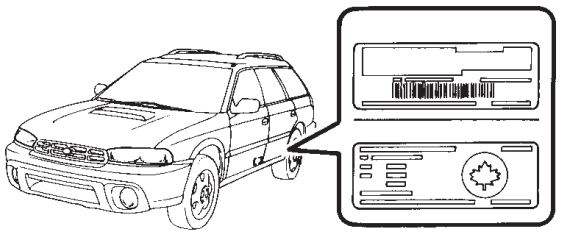 HB0084

To check both GVWR and GAWR and to confirm that the total weight and weight distribution are within safe driving limits, you should have your vehicle and trailer weighed at a commercial weighing station.
Be sure that all cargo is firmly secured to prevent a change in weight distribution while driving.

– CONTINUED –

Downloaded from www.Manualslib.com manuals search engine

▼ Tongue load

⚠ WARNING

If the trailer is loaded with more weight in the back of trailer's axle than in the front, the load on the rear axle of the towing vehicle is taken off. This may cause the rear wheels to skid, especially during braking or when vehicle speed is reduced during cornering, resulting in over-steer, spin out and/or jackknifing.

Ensure that the trailer tongue load is from 8 to 11 percent of the total trailer weight and does not exceed the maximum value of 200 lbs (90 kg).

The tongue load can be weighed with a bathroom scale as shown in the illustration below. When weighing the tongue load, be sure to position the towing coupler at the height at which it would be during actual towing, using a jack as shown.

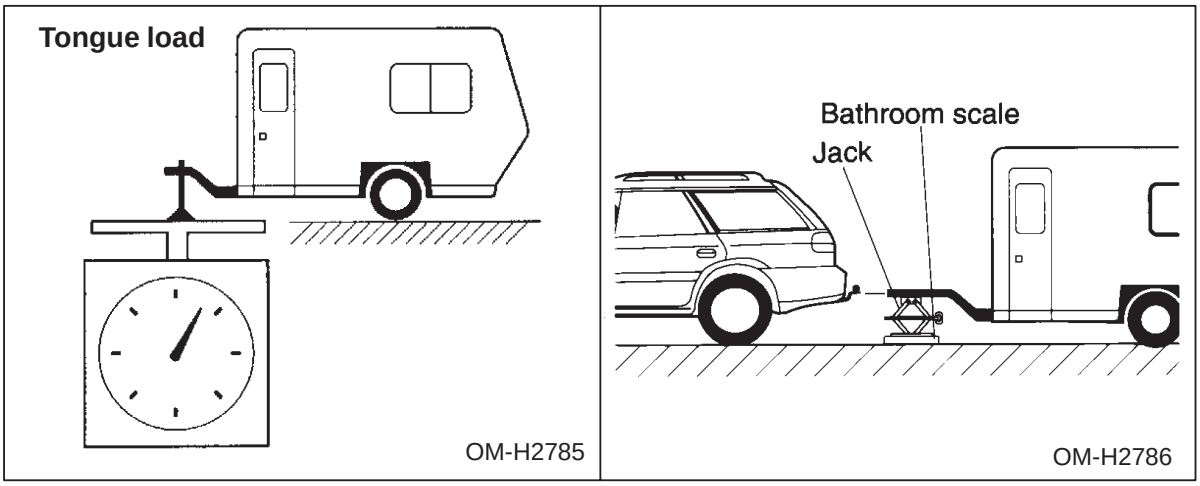

The tongue load can be adjusted by proper distribution of the load in the trailer. Never load the trailer with more weight in the back than in the front; approximately 60 percent of the trailer load should be in the front and approximately 40 percent in the rear. Also, distribute the load as evenly as possible on both the left and right sides.

Be sure that all cargo is firmly secured to prevent a change in weight distribution while driving.

Downloaded from www.Manualslib.com manuals search engine

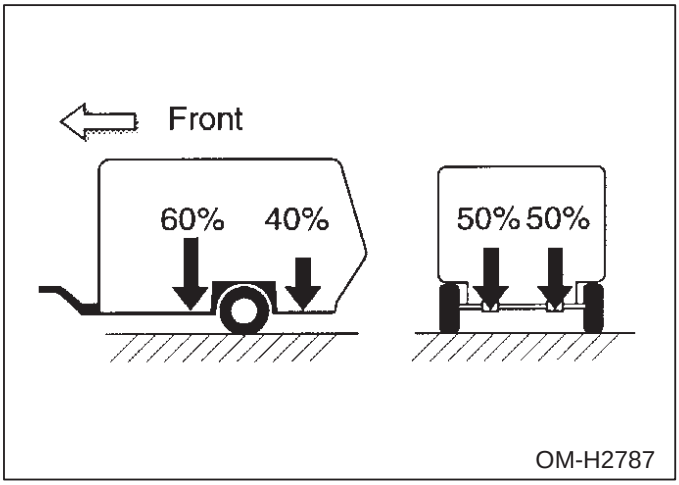

■ Trailer hitches

⚠ WARNING

Never drill the frame or under-body of your vehicle to install a commercial trailer hitch. If you do, dangerous exhaust gas, water or mud may enter into the passenger compartment through the drilled hole. Exhaust gas contains carbon monoxide, a colorless and odorless gas which is dangerous, or even lethal, if inhaled. Also, drilling the frame or under-body of your vehicle could cause deterioration of strength of your vehicle and cause corrosion around the drilled hole.

⚠ CAUTION

Do not modify the vehicle exhaust system, brake system, or other systems when installing a hitch or other trailer towing equipment.

Choose a proper hitch for your vehicle and trailer.
The use of genuine SUBARU trailer hitch is recommended. A genuine SUBARU hitches are available from your SUBARU dealer.
If use of a non-genuine hitch is unavoidable, be sure the hitch is suited to your vehicle and trailer. Consult with a professional hitch supplier to assist you in choosing an appropriate hitch for your vehicle. Be sure to follow all of the hitch manufacturer's instructions for installation and use.

– CONTINUED –

Downloaded from www.Manualslib.com manuals search engine

For all types of hitches, regularly check that the hitch mounting bolts and nuts are tight.

■ Connecting a trailer

▼ Trailer brakes

⚠ WARNING

Do not directly connect your trailer's hydraulic brake system to the hydraulic brake system in your vehicle. Direct connection would cause the vehicle's brake performance to deteriorate and could lead to an accident.

⚠ CAUTION

Adequate size trailer brakes are required when the trailer and its cargo exceed 1,000 lbs (453 kg) total weight.

If your trailer's total weight (trailer weight plus its cargo weight) exceeds 1,000 lbs (453 kg), the trailer is required to be equipped with its own brake system. Electric brakes or surge brakes are recommended, and must be installed properly. Check that your trailer's brakes conform with Federal, state/province and/or other applicable regulations. Your SUBARU's brake system is not designed to be tapped into the trailer's hydraulic brake system. Please ask your SUBARU dealer and professional trailer supplier for more information about the trailer's brake system.

▼ Trailer safety chain

In case the trailer hitch connector or hitch ball should break or become disconnected, the trailer could get loose and create a traffic safety hazard.

For safety, always connect the tow vehicle and trailer with trailer safety chains. Pass the chains crossing each other under the trailer tongue to prevent the trailer from dropping onto the ground in case the trailer tongue should disconnect from the hitch ball. Allow sufficient slack in

Downloaded from www.Manualslib.com manuals search engine

the chains taking tight-turn situations into account; however, be careful not to let them drag on the ground.
For more information about the safety chain connection, refer to the instructions for your hitch and trailer.

▼ Side mirrors

After hitching a trailer to your vehicle, check that the standard side mirrors provide a good rearward field of view without significant blind spots. If significant blind spots occur with the vehicle's standard side mirrors, use towing mirrors that conform with Federal, state/province and/or other applicable regulations.

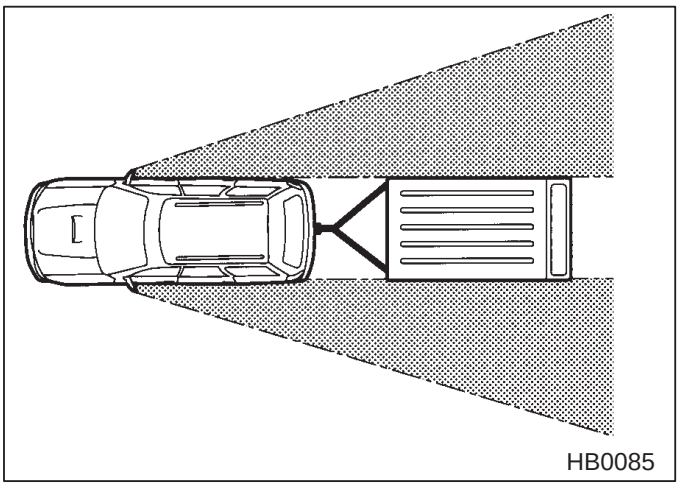

▼ Trailer lights

⚠ CAUTION

Direct splicing or other improper connection of trailer lights may damage your vehicle's electrical system and cause a malfunction of your vehicle's lighting system.

Connection of trailer lights to your vehicle's electrical system requires modifications to the vehicle's lighting circuit to increase its capacity and accommodate wiring changes. To ensure the trailer lights are connected properly, please consult your SUBARU dealer. Check for proper operation of the turn signals and the brake lights each time you hitch up.

– CONTINUED –

Downloaded from www.Manualslib.com manuals search engine

▼ Tires

⚠ WARNING

Never tow a trailer when the temporary spare tire is used. The temporary spare tire is not designed to sustain the towing load. Use of the temporary spare tire when towing can result in failure of the spare tire and/or less stability of the vehicle.

Make sure that all the tires on your vehicle are inflated to the pressure under towing conditions as shown in following table. These tire inflations are also shown on the tire placard located on the left center pillar of your vehicle. Trailer tire condition, size, load rating and proper inflation pressure should be in accordance with the trailer manufacturer's specifications.

Front	29 psi (200 kPa, 2.0 kg/cm^2)
Rear	32 psi (220 kPa, 2.2 kg/cm^2)

In the event your vehicle gets a flat tire when towing a trailer, ask a commercial road service to repair the flat tire.

If you carry a regular size spare tire in your vehicle or trailer as a precaution against getting a flat tire, be sure that the spare tire is firmly secured.

■ Trailer towing tips

⚠ CAUTION

- **Never exceed 45 mph (72 km/h) when towing a trailer in hilly country on hot days.**
- **When towing a trailer, steering, stability, stopping distance and braking performance will be different from normal operation. For safety's sake, you should employ extra caution when towing a trailer and you should never speed. You should also keep the following tips in mind:**

Downloaded from www.Manualslib.com manuals search engine

▼ Before starting out on a trip

- Check that the vehicle and vehicle-to-hitch mounting are in good condition. If any problems are apparent, do not tow the trailer.
- Check that the vehicle sits horizontally with the trailer attached. If the vehicle is tipped sharply up at the front and down at the rear, check the total trailer weight, GVW, GAWs and tongue load again, then confirm that the load and its distribution are acceptable.
- Check that the tire pressures are correct.
- Check that the vehicle and trailer are connected properly. Confirm that
  - the trailer tongue is connected properly to the hitch ball.
  - the trailer lights connector is connected properly and trailer's brake lights illuminate when the vehicle's brake pedal is pressed, and that the trailer's turn signal lights flash when the vehicle's turn signal lever is operated.
  - the safety chains are connected properly.
  - all cargo in the trailer is secured safety in position.
  - the side mirrors provide a good rearward field of view without a significant blind spot.
- Sufficient time should be taken to learn the "feel" of the vehicle/trailer combination before starting out on a trip. In an area free of traffic, practice turning, stopping and backing up.

▼ Driving with a trailer

- You should allow for considerably more stopping distance when towing a trailer. Avoid sudden braking because it may result in skidding or jackknifing and loss of control.
- Avoid abrupt starts and sudden accelerations. If your vehicle has a manual transmission, always start out in first gear and release the clutch at moderate engine RPM.
- Avoid uneven steering, sharp turns and rapid lane changes.
- Slow down before turning. Make a longer than normal turning radius because the trailer wheels will be closer than the vehicle wheels to the inside of the turn. In a tight turn, the trailer could hit your vehicle.
- Crosswinds will adversely affect the handling of your vehicle and trailer, causing sway. Crosswinds can be due to weather conditions or

– CONTINUED –

Downloaded from www.Manualslib.com manuals search engine

the passing of large trucks or buses. If swaying occurs, firmly grip the steering wheel and slow down immediately but gradually.

● When passing other vehicles, considerable distance is required because of the added weight and length caused by attaching the trailer to your vehicle.

● When backing up with a trailer, never accelerate or steer rapidly. When turning back, grip the bottom of the steering wheel with one hand and turn it to the left for a left turn, and turn it to the right for a right turn.

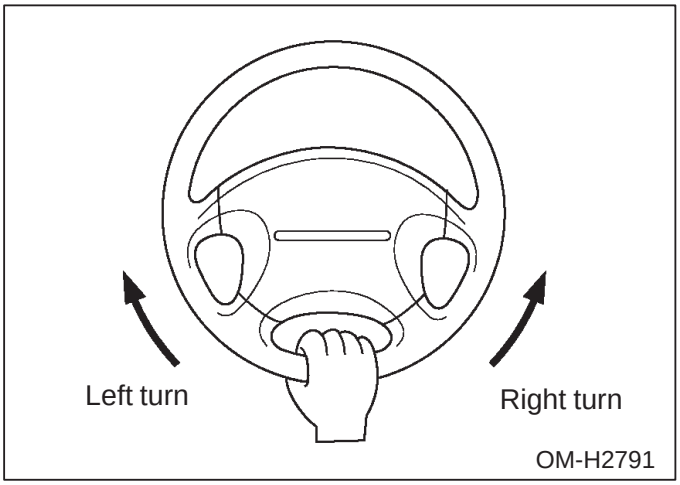

● If the ABS warning light illuminates while the vehicle is in motion, stop towing the trailer and have repairs carried out immediately by the nearest SUBARU dealer.

▼ Driving on grades

● Before going down a steep hill, slow down and shift into low gear in order to utilize the engine braking effect and prevent overheating of your vehicle's brakes. Do not make sudden downshifts.

● When driving uphill in hot weather, the air conditioner may turn off automatically to protect the engine from overheating.

● When driving uphill in hot weather, pay attention to the water temperature gauge needle (for all vehicles) and ATF OIL TEMP warning light (for AT vehicles) since the engine and transmission are relatively prone to overheating under these conditions. If the water temperature gauge needle approaches the OVERHEAT zone or the ATF OIL TEMP warning light illuminates, immediately switch off the air conditioner

Downloaded from www.Manualslib.com manuals search engine

and stop the vehicle at the nearest safe place. Refer to Engine Overheat section (chapter 8), and Warning and Indicator Lights section (chapter 3) in the owner's manual.

- If your vehicle has a automatic transmission, avoid using the accelerator pedal to stay stationary on an uphill slope instead of using the parking brake or foot brake. This may cause the transmission fluid to overheat. Also, if your vehicle is equipped with an automatic transmission, avoid driving with the gear selector lever in "D" when towing a heavy trailer to prevent fluid overheating.

▼ Parking on a grade

Always block the wheels under both vehicle and trailer when parking. Apply the parking brake firmly. You should not park on a hill or slope. But if parking on a hill or slope cannot be avoided, you should take the following steps:

1. Apply the brakes and hold the pedal down.
2. Have someone place wheel blocks under both the vehicle and trailer wheels.
3. When the wheel blocks are in place, release the regular brakes slowly until the blocks absorb the load.
4. Apply the regular brakes and then apply the parking brake; slowly release the regular brakes.
5. Shift into 1st or reverse gear (manual transmission) or "P" (automatic transmission) and shut off the engine.

Downloaded from www.Manualslib.com manuals search engine

In case of emergency

Hazard warning flasher **8-2**

Engine overheating **8-2**

- *If steam is coming from the engine compartment* *8-2*
- *If no steam is coming from the engine compartment* *8-3*

Jump starting **8-3**

- *How to jump start* *8-4*

Flat tires **8-6**

- *Changing a flat tire* *8-6*
- *Temporary spare tire (if equipped)* *8-11*
- *Tire changing tools* *8-13*

Towing **8-15**

- *Transporting your vehicle using a flat-bed truck* *8-15*
- *Towing with the front wheels raised off the ground* *8-15*
- *Towing with all wheels on the ground* *8-16*
- *Towing eyelet* *8-18*

Downloaded from www.Manualslib.com manuals search engine

Hazard warning flasher

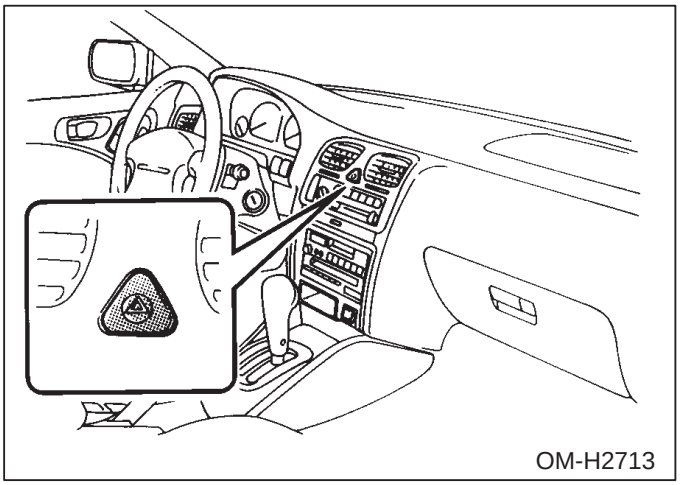

Day or night, if your vehicle becomes a traffic hazard, use the hazard warning flasher. Avoid stopping on the road. It is best to safely pull off the road if a problem occurs. The hazard warning flasher can be activated regardless of the ignition switch position.
Turn on the hazard warning by pushing the hazard warning flasher switch. Turn it off by pushing the switch again.

Engine overheating

⚠ WARNING
Never attempt to remove the radiator cap until the engine has been shut off and has fully cooled down. When the engine is hot, the coolant is under pressure. Removing the cap while the engine is still hot could release a spray of boiling hot coolant, which could burn you very seriously.

If the engine overheats, safely pull off the road and stop the vehicle in a safe place.

■ If steam is coming from the engine compartment

Turn the engine off and get everyone away from the vehicle until it cools down.

Downloaded from www.Manualslib.com manuals search engine

■ If no steam is coming from the engine compartment

1. Keep the engine running at idling speed.
2. Open the hood to ventilate the engine compartment.

Confirm that the cooling fan is turning. If the fan is not turning, immediately turn the engine off and contact your authorized dealer for repair.

3. After the engine coolant temperature has dropped, turn off the engine.

If the temperature gauge stays at the overheated zone, turn the engine off.

4. After the engine has fully cooled down, check the coolant level in the reserve tank.

If the coolant level is below the “MIN” mark, add coolant up to the “MAX” mark.

5. If there is no coolant in the reserve tank, add coolant to the reserve tank. Then remove the radiator cap and fill the radiator with coolant.

If you remove the radiator cap from a hot radiator, first wrap a thick cloth around the radiator cap, then turn the cap counterclockwise slowly without pressing down until it stops. Release the pressure from the radiator. After the pressure has been fully released, remove the cap by pressing down and turning it.

Jump starting

⚠ WARNING

- **Battery fluid is SULFURIC ACID. Do not let it come in contact with the eyes, skin, clothing or the vehicle.**

If battery fluid gets on you, thoroughly flush the exposed area with water immediately. Get medical help if the fluid has entered your eyes.

If battery fluid is accidentally swallowed, immediately drink a large amount of milk or water, and obtain immediate medical help.

Keep everyone including children away from the battery.

– CONTINUED –

Downloaded from www.Manualslib.com manuals search engine

- **The gas generated by a battery explodes if a flame or spark is brought near it. Do not smoke or light a match while jump starting.**
- **Never attempt jump starting if the discharged battery is frozen. It could cause the battery to burst or explode.**
- **Whenever working on or around a battery, always wear suitable eye protectors, and remove metal objects such as rings, bands or other metal jewelry.**
- **Be sure the jumper cables and clamps on them do not have loose or missing insulation.**

Do not jump start unless cables in suitable condition are available.

- **A running engine can be dangerous. Keep your fingers, hands, clothing, hair and tools away from the cooling fan, belts and any other moving engine parts. Removing rings, watches and ties is advisable.**

When your vehicle does not start due to a run down (discharged) battery, the vehicle may be jump started by connecting your battery to another battery (called the booster battery) with jumper cables.

Jump starting is dangerous if it done incorrectly. If you are unsure about the proper procedure for jump starting, consult a competent mechanic.

■ How to jump start

1. Make sure the booster battery is 12 volts and the negative terminal is grounded.
2. If the booster battery is in another vehicle, do not let the two vehicles touch.
3. Turn off all unnecessary lights and accessories.
4. Connect the jumper cables exactly in the sequence illustrated.

Downloaded from www.Manualslib.com manuals search engine

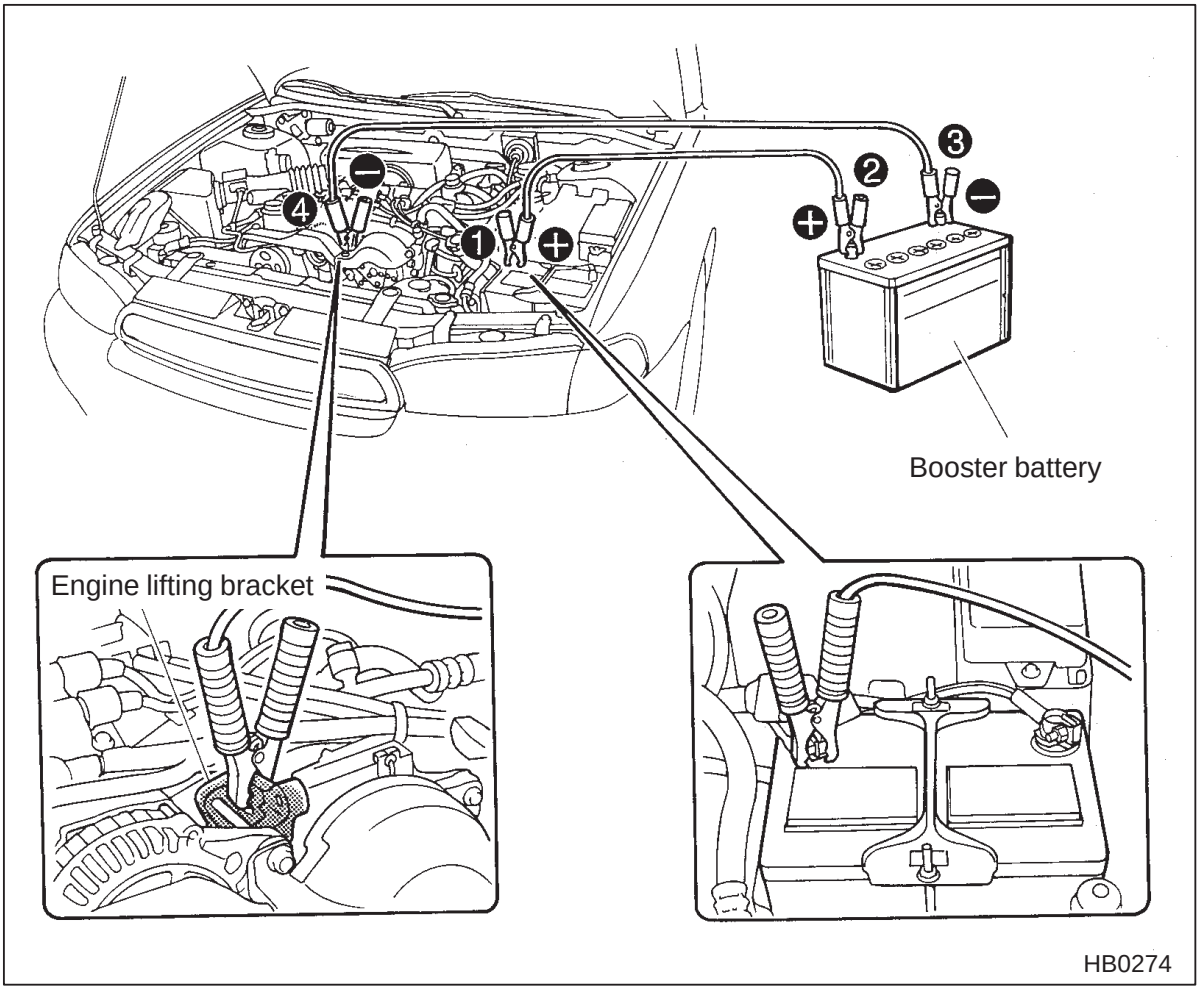

① Connect one jumper cable to the positive (+) terminal on the discharged battery.
② Connect the other end of the jumper cable to the positive (+) terminal of the booster battery.
③ Connect one end of the other cable to the negative (–) terminal of the booster battery.
④ Connect the other end of the cable to the engine lifting bracket.

Make sure that the cables are not near any moving parts and that the cable clamps are not in contact with any other metal.

5. Start the engine of the vehicle with the booster battery and run it at moderate speed. Then start the engine of the vehicle that has the discharged battery.
6. When finished, carefully disconnect the cables in exactly the reverse order.

Downloaded from www.Manualslib.com manuals search engine

Flat tires

⚠ WARNING

- **Do not jack up the vehicle on an incline or a loose road surface. The jack can come out of the jacking point or sink into the ground and this can result in a severe accident.**
- **Use only the jack provided with your vehicle. The jack supplied with the vehicle is designed only for changing a tire. Never get under the vehicle while supporting the vehicle with this jack.**
- **Always turn the engine off before raising the flat tire off the ground using the jack. Never swing or push the vehicle supported with the jack. The jack can come out of the jacking point due to a jolt and this can result in a severe accident.**

If you have a flat tire while driving, never brake suddenly; keep driving straight ahead while gradually reducing speed. Then slowly pull off the road to a safe place.

■ Changing a flat tire

⚠ WARNING

- **Do not use oil or grease on the wheel studs or nuts when the spare tire is installed. This could cause the nuts to become loose and lead to an accident.**
- **Never place a tire or tire changing tools in the passenger compartment after changing wheels. In a sudden stop or collisions, loose equipment could strike occupants and cause injury. Store the tire and all tools in the proper place.**

1. Park on a hard, level surface, whenever possible, then stop the engine.
2. Set the parking brake securely and shift a manual transmission vehicle in reverse or an automatic transmission vehicle in the “P” (Park) position.
3. Turn on the hazard warning flasher and have everyone get out of the vehicle.

Downloaded from www.Manualslib.com manuals search engine

4. Put wheel blocks at the front and rear of the tire diagonally opposite the flat tire.

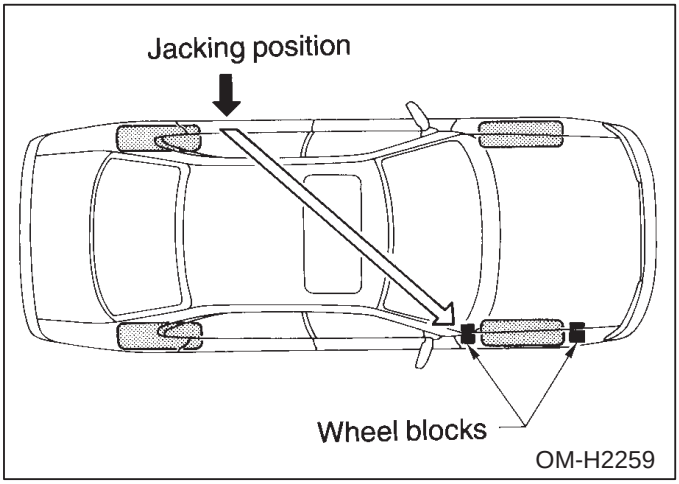

5. Take out the spare tire, jack, and wheel nut wrench. See Tire Changing Tools in this chapter.
6. (If your vehicle has wheel covers) Insert the wheel nut wrench into the notch provided in the wheel cover, and pry it off.

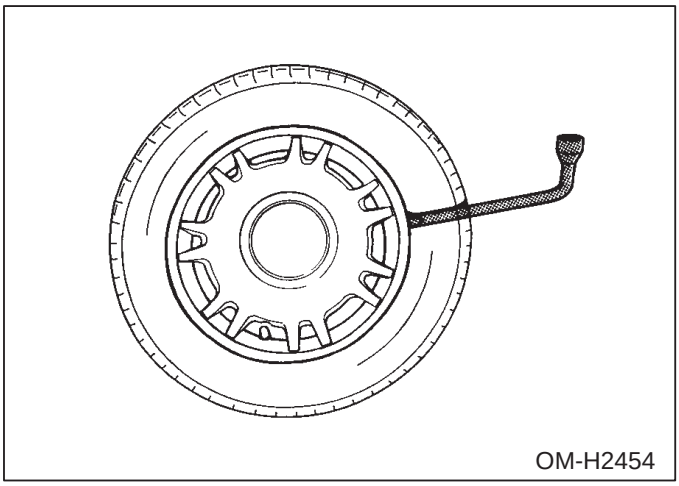

– CONTINUED –

Downloaded from www.Manualslib.com manuals search engine

7. Loosen the wheel nuts using the wheel nut wrench but do not remove the nuts.

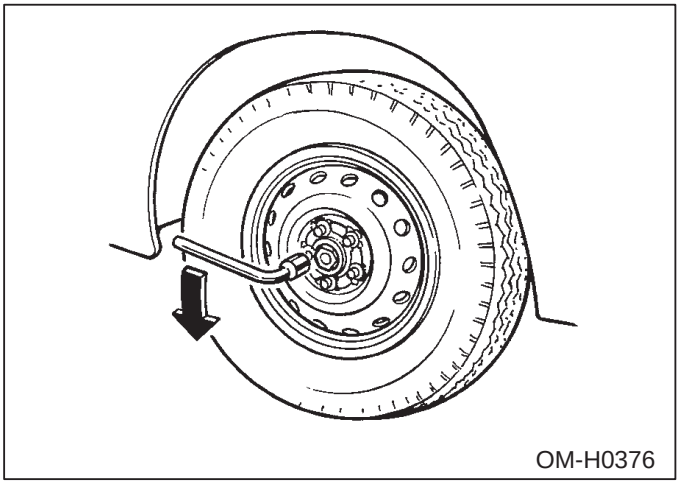

8. Place the jack under the side sill at the front or rear jack-up point closest to the flat tire.
Turn the jackscrew by hand until the jack head engages firmly into the jack-up point.

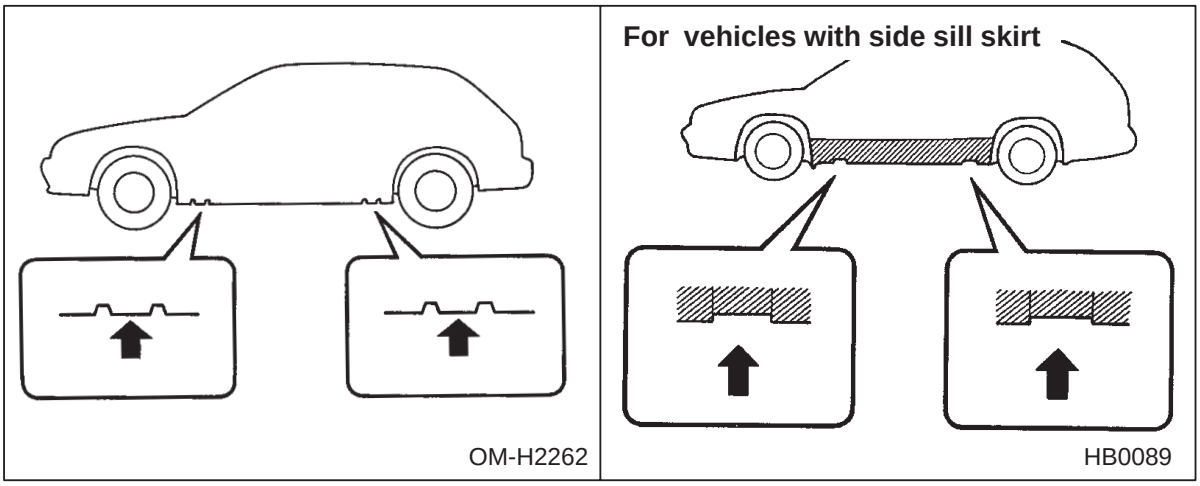

Downloaded from www.Manualslib.com manuals search engine

9. Insert the jack handle into the jackscrew, and turn the handle clockwise until the tire clears the ground. Do not raise the vehicle higher than necessary.

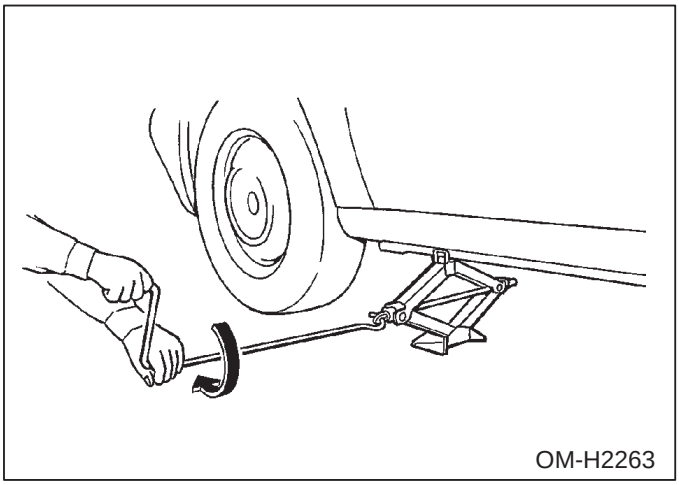

10. Remove the wheel nuts and the flat tire.
11. Before putting the spare tire on, clean the mounting surface of the wheel and hub with a cloth.

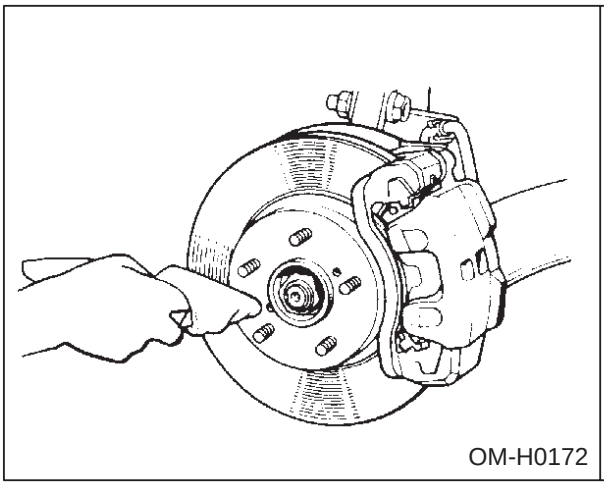

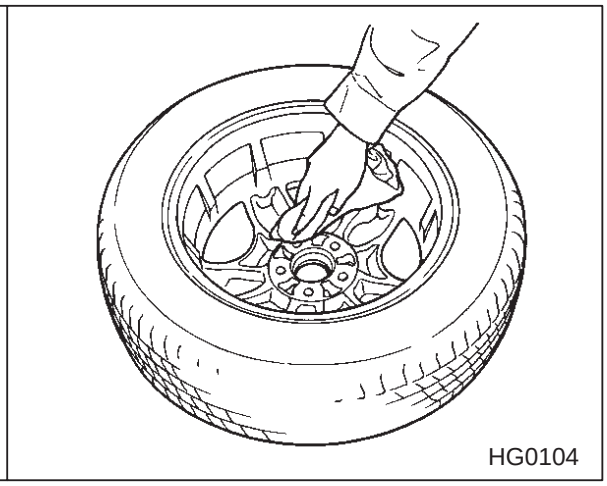

12. Put on the spare tire. Replace the wheel nuts. Tighten them by hand.
13. Turn the jack handle counterclockwise to lower the vehicle.
14. Use the wheel nut wrench to securely tighten the wheel nuts to the specified torque, following the tightening order in the illustration.

– CONTINUED –

Downloaded from www.Manualslib.com manuals search engine

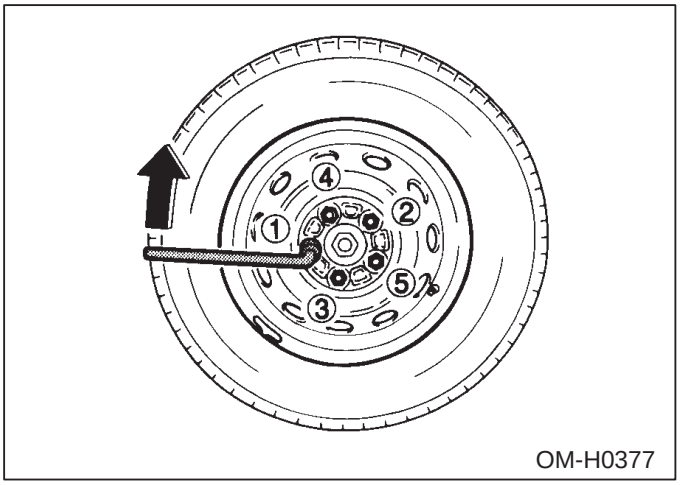

The torque for tightening the nuts is 58 to 72 ft-lb (78 to 98 N-m, 8 to 10 kg-m). This torque is equivalent to applying about 88 to 110 lbs (40 to 50 kg) at the top of the wheel nut wrench. Never use your foot on the wheel nut wrench or a pipe extension on the wrench because you may exceed the specified torque. Have the wheel nut torque checked at a nearest automotive service facility.

15. Store the flat tire in the spare tire compartment.

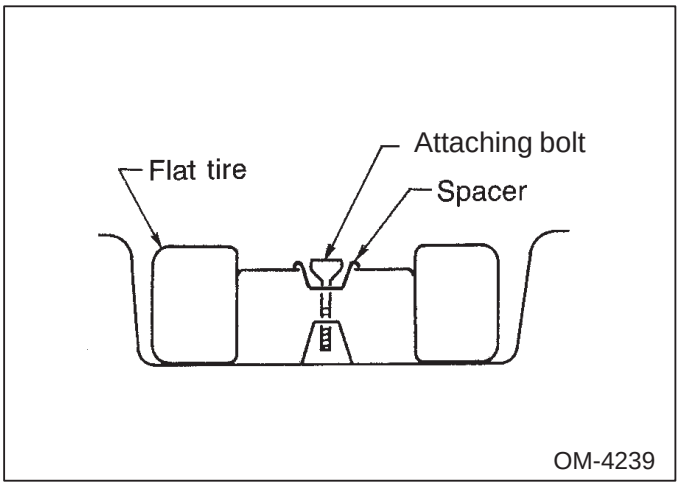

(If your vehicle is equipped with a temporary spare tire.) When storing a conventional tire, put the spacer upside down and tighten the attaching bolt firmly.
Also store the jack and wheel nut wrench in their storage locations. See Tire Changing Tools in this section.

Downloaded from www.Manualslib.com manuals search engine

■ Temporary spare tire (if equipped)

⚠ WARNING

Never tow a trailer when the temporary spare tire is used. The temporary spare tire is not designed to sustain the towing load. Use of the temporary spare tire when towing can result in failure of the spare tire and/or less stability of the vehicle and may lead to an accident.

⚠ CAUTION

Never use any temporary spare tire other than the original. Using other sizes may result in severe mechanical damage to the drive train of your vehicle.

The temporary spare tire is smaller and lighter than a conventional tire and is designed for emergency use only. Remove the temporary spare tire and re-install the conventional tire as soon as possible because the spare tire is designed only for temporary use.

Check the inflation pressure of the temporary spare tire at **60 psi (420 kPa, 4.2 kg/cm^2)** periodically to keep the tire ready for use.

When using the temporary spare tire, note the following:

- Do not exceed 50 mph (80 km/h).
- Do not put a tire chain on the temporary spare tire. Because of the smaller tire size, a tire chain will not fit properly .
- Do not use two or more temporary spare tires at the same time.
- Do not drive over obstacles. This tire has a smaller diameter, so road clearance is reduced.
- When the wear indicator appears on the tread, replace the tire.

– CONTINUED –

Downloaded from www.Manualslib.com manuals search engine

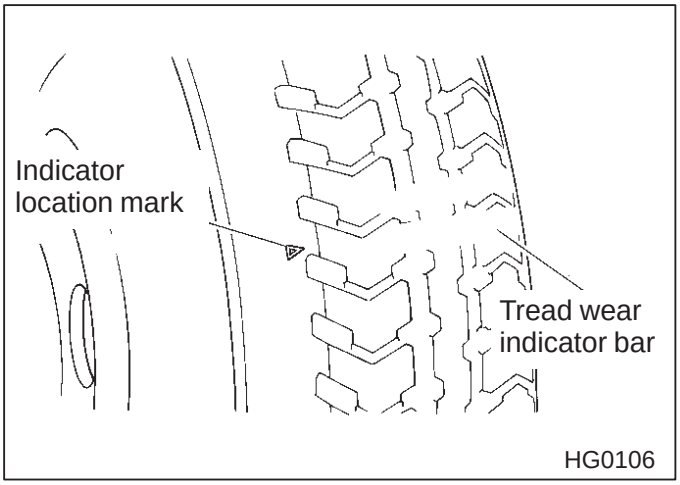

- (If your vehicle is AWD with automatic transmission) Before driving your vehicle with temporary spare tire, put a spare fuse inside the FWD connector located in the engine compartment and confirm that the front-wheel drive warning light comes on. The all wheel drive capability of the vehicle has now been deactivated. After re-installing the conventional tire, remove the spare fuse from the FWD connector in oder to reactivate all wheel drive.

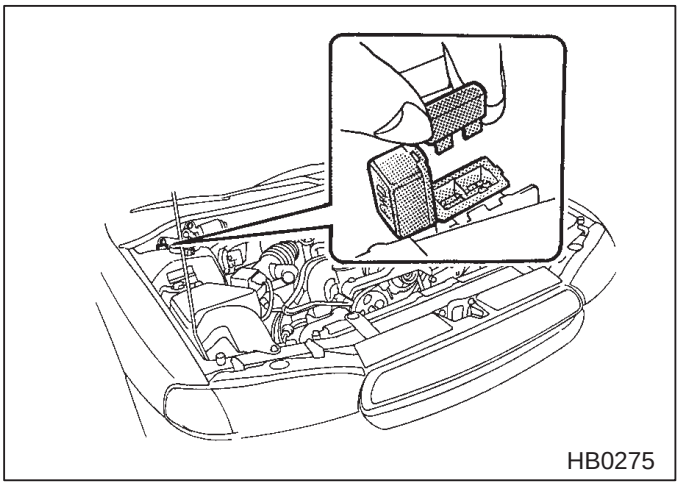

Downloaded from www.Manualslib.com manuals search engine

■ Tire changing tools

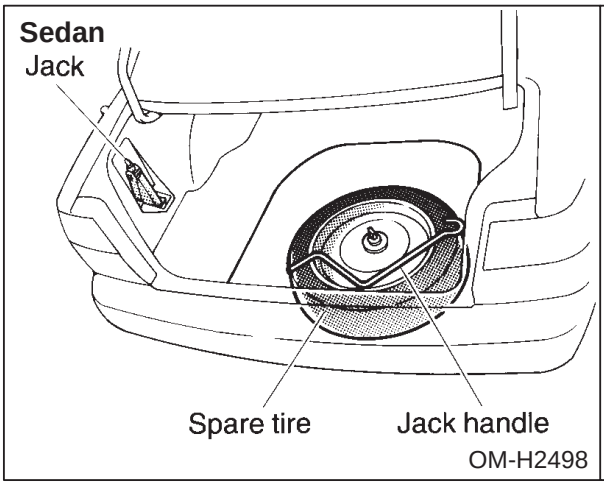

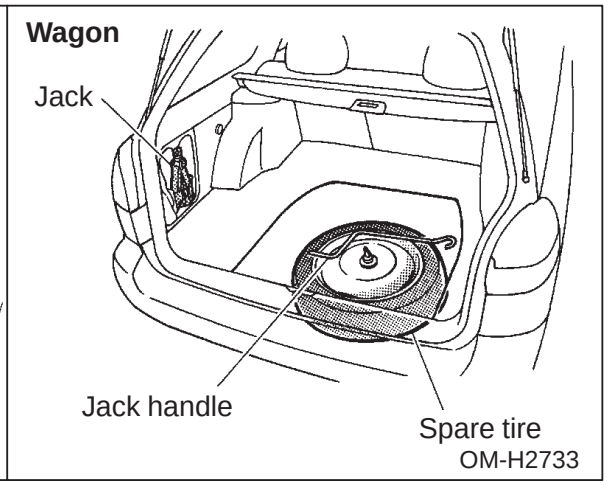

▼ Spare tire

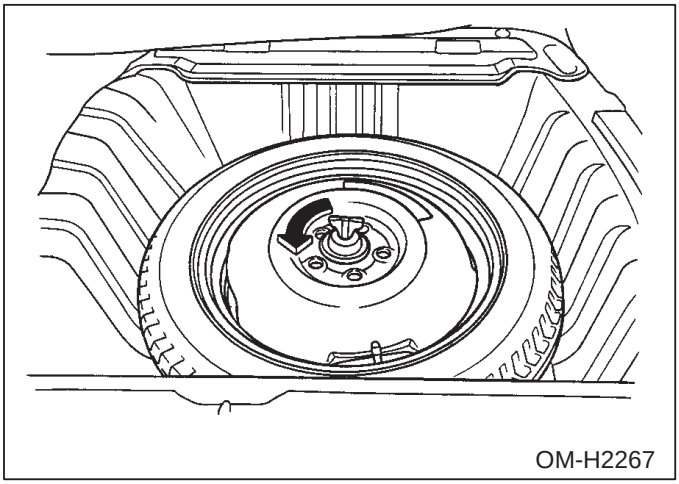

The spare tire is stored under the floor of the trunk or the luggage compartment. To remove the spare tire, first remove the spare tire cover, turn the attaching bolt counterclockwise, then take the spare tire out.

– CONTINUED –

Downloaded from www.Manualslib.com manuals search engine

▼ Jack and jack handle

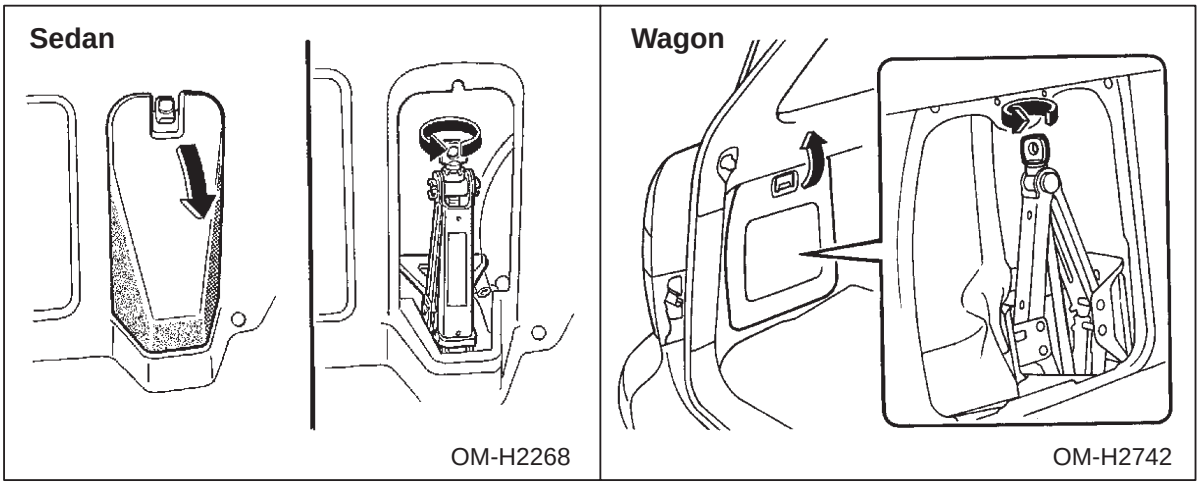

The jack is stored on the left side of the trunk or luggage compartment.

To take out the jack:
Sedan: first pull the tab on the trim cover down to open the cover, turn the jackscrew counterclockwise to loosen it, then remove the jack.
Wagon: first pull the tab on the trim cover to open the cover, turn the jackscrew counterclockwise to loosen it, then remove the jack.

The jack handle is stored under the spare tire cover.

Downloaded from www.Manualslib.com manuals search engine

Towing

If towing is necessary, it is best done by your SUBARU dealer or a commercial towing service. Observe the following procedures for safety.

■ Transporting your vehicle using a flat-bed truck

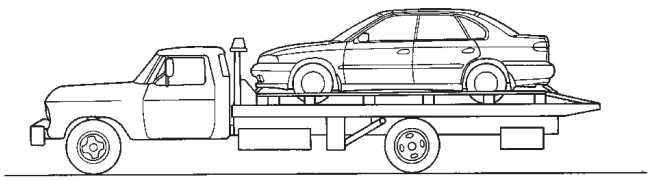

HB0037

This is the best way to transport your vehicle. Use the following procedures to ensure safe transportation.

1. Shift the selector lever into the “P” position for automatic transmission vehicles or “1st” for manual transmission vehicles.
2. Pull up the parking brake lever firmly.
3. Secure the vehicle onto the carrier properly with safety chains. Each of safety chain should be equally tightened and care must be taken not to pull the chains so tightly that the suspension bottoms out.

■ Towing with the front wheels raised off the ground

⚠ WARNING

Never tow manual transmission AWD vehicles with the front wheels raised off the ground while the rear wheels are on the ground. This will cause the vehicle to spin away due to the operation or deterioration of the viscous coupling.

– CONTINUED –

Downloaded from www.Manualslib.com manuals search engine

⚠ CAUTION

When transmission failure occurs, transport your vehicle on a flat-bed truck.

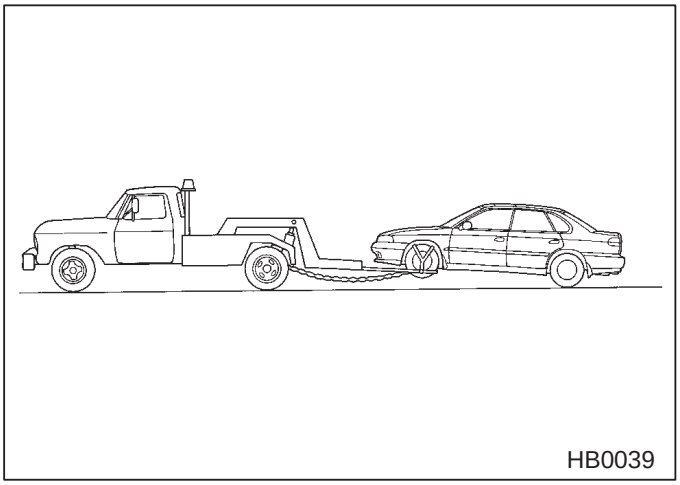

1. Check the transmission and differential oil levels and add oil to bring it to the upper level if necessary.
2. Release the parking brake and put the transmission in neutral.
3. The ignition switch should be in the “ACC” position while the vehicle is being towed.
4. Take up slack in the towline slowly to prevent damage to the vehicle.

■ Towing with all wheels on the ground

⚠ WARNING

- **Never turn the ignition switch to the “LOCK” position while the vehicle is being towed because the steering wheel and the direction of the wheels will be locked.**
- **Remember that the brake booster and power steering do not function when the engine is not running. Because the engine is turned off, it will take greater effort to operate the brake pedal and steering wheel.**

Downloaded from www.Manualslib.com manuals search engine

⚠ CAUTION

- **When transmission failure occurs, transport your vehicle on a flat-bed truck.**
- **For AWD vehicles with automatic transmission, the traveling speed must be limited to less than 20 mph (30 km/h) and the traveling distance to less than 31 miles (50 km). For greater speeds and distances, transport your vehicle on a flat-bed truck.**
- **Be sure to use a flexible cable or rope for towing purpose and wrap the towing cable or rope with cloth to prevent damage to the bumper.**

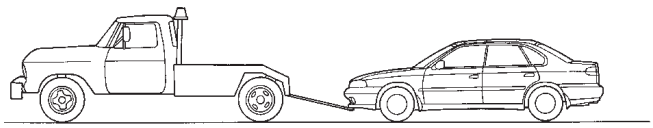

HB0038

We do not recommend this method of towing. Use this method only when towing service by a SUBARU dealer or a commercial towing service is not available.

1. Check the transmission and differential oil levels and add oil to bring it to the upper level if necessary.
2. Release the parking brake and put the transmission in neutral.
3. The ignition switch should be in the “ACC” position while the vehicle is being towed.
4. Take up slack in the towline slowly to prevent damage to the vehicle.

– CONTINUED –

Downloaded from www.Manualslib.com manuals search engine

■ Towing eyelet

⚠ CAUTION

- **Never use the tie-down eyelet closest to the muffler under the vehicle for towing purposes.**
- **Do not apply excessive lateral load to the towing eyelets.**

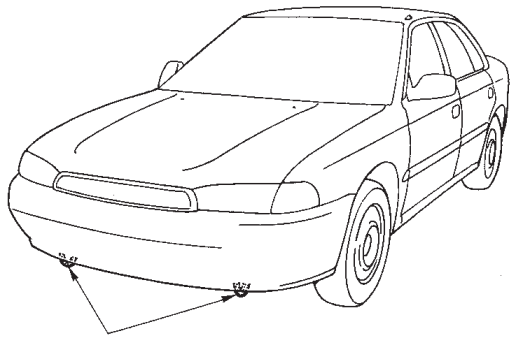

Towing eyelet

HB0276

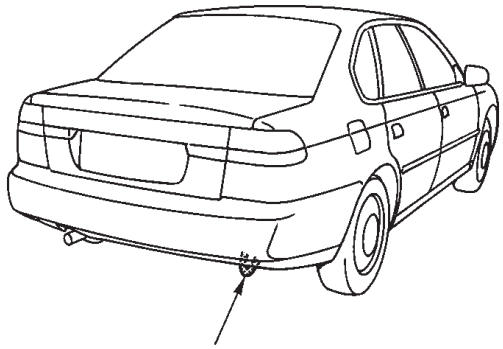

Towing eyelet

OM-H2744

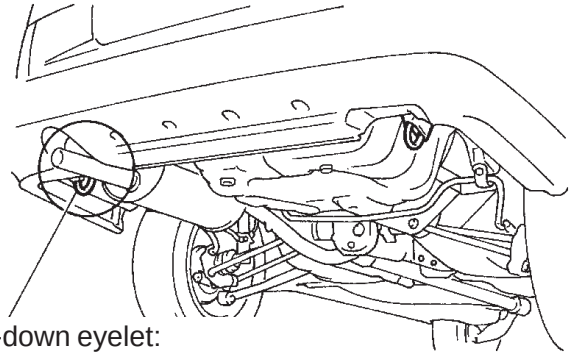

Tie-down eyelet:
Never use the tie-down eyelet for towing purpose.

HB0075

The towing eyelets should be used only in an emergency (e.g., to free a stuck vehicle from mud, sand or snow).

Downloaded from www.Manualslib.com manuals search engine

Appearance care

Exterior care **9-2**
- Washing 9-2
- Waxing and polishing 9-3

Corrosion protection **9-4**
- Most common causes of corrosion 9-4
- To help prevent corrosion 9-4

Cleaning the interior **9-5**
- Seat fabric 9-5
- Leather seat materials 9-6
- Synthetic leather upholstery 9-6

Cleaning aluminum wheels **9-7**

Cleaning fog light lens (for SUS) **9-7**

Downloaded from www.Manualslib.com manuals search engine

Exterior care

■ Washing

⚠ CAUTION

- **When washing the vehicle, the brakes may get wet. As a result, the brake stopping distance will be longer. To dry the brakes, drive the vehicle at a safe speed while lightly pressing the brake pedal to heat up the brakes.**
- **Do not wash the engine compartment. If water enters electrical parts or the power steering fluid reservoir, it will cause engine trouble or faulty power steering respectively.**

The best way to preserve your vehicle's beauty is frequent washing. Wash the vehicle at least once a month to avoid contamination by road grime.

Wash dirt off with a wet sponge and plenty of lukewarm or cold water. Do not wash the vehicle with hot water and in direct sunlight.

Salt, chemicals, insects, tar, soot and bird droppings should be washed off by using a light detergent, as required. If you use a light detergent, make certain that it is a neutral detergent. Do not use strong soap or chemical detergents. All cleaning agents should be promptly flushed from the surface and not allowed to dry there. Rinse the vehicle thoroughly with plenty of lukewarm water. Wipe the remaining water off with a chamois or soft cloth.

▼ Washing the underbody

Chemicals, salts and gravel used for deicing road surfaces are extremely corrosive, accelerating the corrosion of underbody components, such as the exhaust system, fuel and brake lines, brake cables, floor pan and fenders, and suspension.

Thoroughly flush the underbody and inside of the fenders with lukewarm or cold water at frequent intervals to reduce the harmful effects of such agents.

Downloaded from www.Manualslib.com manuals search engine

▼ Using a warm water washer

- Keep a good distance of 12 inches (30 cm) or more between the washer nozzle and the vehicle.
- Do not wash the same area continuously.
- If a stain will not come out easily, wash by hand. Some warm water washers are of the high temperature, high pressure type and they can damage or deform the resin parts such as mouldings, or cause water to leak into the vehicle.

■ Waxing and polishing

Always wash and dry the vehicle before waxing and polishing.
Use a good quality polish and wax and apply them according to the manufacturer's instructions. Wax or polish when the painted surface is cool.

Be sure to polish and wax the chrome trim, as well as the painted surfaces. Loss of wax on a painted surface leads to loss of the original luster and also quickens the deterioration of the surface. It is recommended that a coat of wax be applied at least once a month, or whenever the surface no longer repels water.

If the appearance of the paint has diminished to the point where the luster or tone cannot be recovered, lightly polish the surface with a fine-grained compound. Never polish just the affected area, but include the surrounding area as well. Always polish in only one direction. A No. 2000 grain compound is recommended. Never use a coarse-grained compound. Coarser grained compounds have a smaller grain-size number and could damage the paint. After polishing with a compound, coat with wax to restore the original luster. Frequent polishing with a compound or an incorrect polishing technique will result in removing the paint layer and exposing the undercoat. When in doubt, it is always best to contact your SUBARU dealer or an auto paint specialist.

Downloaded from www.Manualslib.com manuals search engine

Corrosion protection

Your SUBARU has been designed and built to resist corrosion. Special materials and protective finishes have been used on most parts of the vehicle to help maintain fine appearance, strength, and reliable operation.

■ Most common causes of corrosion

The most common causes of corrosion are:

1. The accumulation of moisture retaining dirt and debris in body panel sections, cavities, and other areas.
2. Damage to paint and other protective coatings caused by gravel and stone chips or minor accidents.

Corrosion is accelerated on the vehicle when:

1. It is exposed to road salt or dust control chemicals, or used in coastal areas where there is more salt in the air, or in areas where there is considerable industrial pollution.
2. It is driven in areas of high humidity, especially when temperatures range just above freezing.
3. Dampness in certain parts of the vehicle remains for a long time, even though other parts of the vehicle may be dry.
4. High temperatures will cause corrosion to parts of the vehicle which cannot dry quickly due to lack of proper ventilation.

■ To help prevent corrosion

Wash the vehicle frequently. If you drive on salted roads in the winter or if you live in a coastal area, you should flush the underbody with fresh water frequently.

After the winter has ended, it is recommended that the underbody be given a very thorough washing.

Before the beginning of winter, check the condition of underbody components, such as the exhaust system, fuel and brake lines, brake cables, suspension, steering system, floor pan, and fenders. If any of them are found to be rusted, they should be given an appropriate rust prevention

Downloaded from www.Manualslib.com manuals search engine

treatment or should be replaced. Contact your SUBARU dealer to perform this kind of maintenance and treatment if you need assistance.

Repair chips and scratches in the paint as soon as you find them.

Check the interior of the vehicle for water and dirt accumulation under the floor mats because that could cause corrosion. Occasionally check under the mats to make sure the area is dry.

Keep your garage dry. Do not park your vehicle in a damp, poorly ventilated garage. In such a garage, corrosion can be caused by dampness. If you wash the vehicle in the garage or put the vehicle into the garage when wet or covered with snow, that can cause dampness.

If your vehicle is operated in cold weather and/or in areas where road salts and other corrosive materials are used, the door hinges and locks, trunk lid lock, and hood latch should be inspected and lubricated periodically.

Cleaning the interior

Use a vacuum cleaner to get rid of the dust and dirt. Wipe the vinyl areas with a clean, damp cloth.

■ Seat fabric

Remove loose dirt, dust or debris with a vacuum cleaner. If the dirt is caked on the fabric or hard to remove with a vacuum cleaner, use a soft blush then vacuum it.
Wipe the fabric surface with a tightly wrung cloth and dry the seat fabric thoroughly. If the fabric is still dirty, wipe using a solution of mild soap and lukewarm water then dry thoroughly.

If the stain does not come out, try a commercially-available fabric cleaner. Use the cleaner on a hidden place and make sure it does not affect the fabric adversely. Use the cleaner according to its instruction.

– CONTINUED –

Downloaded from www.Manualslib.com manuals search engine

■ Leather seat materials

The leather used by SUBARU is a high quality natural product which will retain its distinctive appearance and feel for many years with proper care.

Allowing dust or road dirt to build up on the surface can cause the material to become brittle and to wear prematurely. Regular cleaning with a soft, moist, natural fiber cloth should be performed monthly, taking care not to soak the leather or allow water to penetrate the stitched seams.

A mild detergent suitable for cleaning woolen fabrics may be used to remove difficult dirt spots, rubbing with a soft, dry cloth afterwards to restore the luster. If your SUBARU is to be parked for a long time in bright sunlight, it is recommended that the seats and headrests be covered, or the windows shaded, to prevent fading or shrinkage.

Minor surface blemishes or bald patches may be treated with a commercial leather spray lacquer. You will discover that each leather seat section will develop soft folds or wrinkles, which is characteristic of genuine leather.

■ Synthetic leather upholstery

The synthetic leather material used on the SUBARU may be cleaned using mild soap or detergent and water, after first vacuuming or brushing away loose dirt. Allow the soap to soak in for a few minutes and wipe off with a clean, damp cloth. Commercial foam-type cleaners suitable for synthetic leather materials may be used when necessary.

NOTE

Strong cleaning agents such as solvents, paint thinners, window cleaner or gasoline must never be used on leather or synthetic interior materials.

Downloaded from www.Manualslib.com manuals search engine

Cleaning aluminum wheels

- Promptly wipe the aluminum wheels clean of any kind of grime or agent. If dirt is left on too long, it may be difficult to clean off.
- Do not use soap containing grit to clean the wheels. Be sure to use a neutral cleaning agent, and later rinse thoroughly with water. Do not clean the wheels with a stiff brush or expose them to a high-speed washing device.
- Clean the vehicle (including the aluminum wheels) with water as soon as possible when it has been splashed with sea water, exposed to sea breezes, or driven on roads treated with salt or other agents.

Cleaning fog light lens (for SUS)

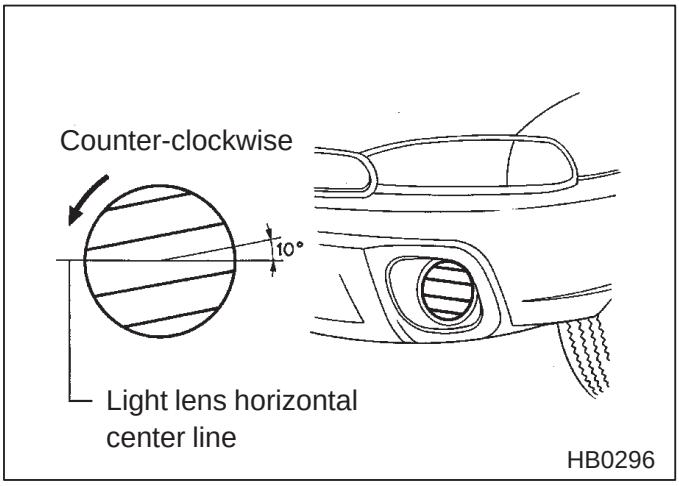

1. Stop the vehicle in a safe place.
2. Stop the engine and turn off the fog lights.
3. Check that the fog lights are not hot. Then, grasp the fog light protector and turn it approximately 10° counter-clockwise.
4. Pull the protector off the fog light.
5. Wash the lens with water.
6. Apply the protector to the lens at an angle of approximately 10° from the fog light's horizontal center line. Then, turn the protector clockwise until it stops. Finally, check that the protector's horizontal bars are parallel with the fog light's horizontal center line.

– CONTINUED –

Downloaded from www.Manualslib.com manuals search engine

NOTE

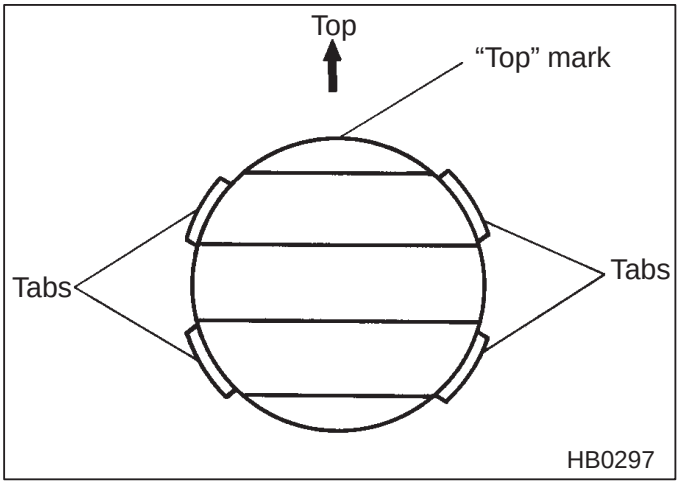

When fitting the grid protector, make sure the “TOP” mark is at the top.

Downloaded from www.Manualslib.com manuals search engine

Maintenance and service

Maintenance precautions 10-3
Before checking or servicing in the engine compartment 10-4
When you do the checking or servicing in the engine compartment while the engine is running 10-4
Engine compartment overview 10-5
Engine, transmission, and differential gear oil leaks 10-8
Engine oil 10-9
Checking the oil level 10-9
Changing the oil and oil filter 10-10
Recommended grade and viscosity 10-12
Recommended grade and viscosity under severe driving conditions 10-13
Cooling system, hoses and connections 10-14
Engine coolant 10-14
Checking the coolant level 10-14
Changing the coolant 10-16
Air cleaner element 10-20
Replacing the air cleaner element 10-20
Spark plugs 10-22
Replacing the spark plugs 10-22
Recommended spark plugs 10-22
Drive belts 10-23
Inspection 10-23
Manual transmission oil 10-24
Checking the oil level 10-24
Recommended grade and viscosity 10-24
Automatic transmission fluid 10-25
Checking the fluid level when the fluid is hot 10-25
Checking the fluid level when the fluid is cold 10-26
Recommended fluid 10-26
Front differential gear oil (Automatic transmission) 10-27
Checking the oil level 10-27
Recommended grade and viscosity 10-27
Rear differential gear oil (AWD vehicles) 10-28
Checking the oil level 10-28
Recommended grade and viscosity 10-29
Power steering fluid 10-30
Checking the fluid level when the fluid is hot 10-30
Checking the fluid level when the fluid is cold 10-31
Recommended fluid 10-32
Brake fluid 10-32
Checking the fluid level 10-32
Recommended brake fluid 10-33

Downloaded from www.Manualslib.com manuals search engine

Clutch fluid (2.5 liter MT models) 10-34
Recommended clutch fluid 10-35
Brake booster 10-35
Checking brake booster operation 10-35
Battery 10-36
Windshield washer fluid 10-37
Replacement of windshield wiper blades 10-38
Brake pedal 10-40
Checking the brake pedal free play 10-40
Checking the brake pedal reserve distance 10-41
Clutch pedal (Manual transmission) 10-41
Checking the clutch function 10-41
Checking the clutch pedal free play 10-42
Hill holder (Manual transmission — if equipped) 10-42
Replacement of brake pad and lining 10-43
Audiable brake pad wear indicator 10-43
Breaking-in of new brake pads and linings 10-43
Parking brake stroke 10-45
Tires and wheels 10-45
Inspection and rotation 10-45
Wheel covers 10-47
Aluminum wheels (If equipped) 10-48
Fuses 10-49
Replacing a fuse 10-50
Main fuse and fusible link 10-52
Installation of accessories 10-53
Replacing bulbs 10-54
Headlight 10-55
Fog light (OUTBACK and SUS) 10-55
Fog light (GT models) 10-56
Front turn signal, parking light and front side marker light 10-58
Rear combination lights 10-59
License plate light 10-60
Interior light, spot light, luggage compartment light and step light 10-61
Trunk light 10-62
High mount stop light 10-62
To install the rear license plate (Wagon) 10-64

Downloaded from www.Manualslib.com manuals search engine

Maintenance precautions

When maintenance and service are required, it is recommended that all work be done by an authorized SUBARU dealer.

If you perform maintenance and service by yourself, you should familiarize yourself with the information provided in this section on general maintenance and service for your SUBARU.

Incorrect or incomplete service could cause improper or unsafe vehicle operation. Any problems caused by improper maintenance and service performed by you are not eligible for warranty coverage.

⚠ WARNING

- **Testing of a Full-Time All-Wheel Drive vehicle must NEVER be performed on a single two-wheel dynamometer or similar apparatus nor should you install the FWD fuse in the engine compartment. Attempting to do so will result in transmission damage and in uncontrolled vehicle movement and may cause an accident or injuries to persons nearby.**
- **Always select a safe area when performing maintenance on your vehicle.**
- **Always be very careful to avoid injury when working on the vehicle. Remember that some of the materials in the vehicle may be hazardous if improperly used or handled, for example, battery acid.**
- **Your vehicle should only be serviced by persons fully competent to do so. Serious personal injury may result to persons not experienced in servicing vehicles.**
- **Always use the proper tools and make certain that they are well maintained.**
- **Never get under the vehicle supported only by a jack. Always use a safety stand to support the vehicle.**
- **Never keep the engine running in a poorly ventilated area, such as a garage or other closed areas.**

– CONTINUED –

Downloaded from www.Manualslib.com manuals search engine

- Do not smoke or allow open flames around the fuel or battery. This will cause a fire.
- Because the fuel system is under pressure, replacement of the fuel filter should be performed only by your SUBARU dealer.
- The SRS AIRBAG has no user-serviceable parts. Tampering with or disconnecting the system's wiring could result in accidental inflation of the airbag or could make the system inoperative, which may result in serious injury. The wiring harnesses of the SRS AIRBAG system are covered with yellow insulation and the connectors of the system are yellow, for easy identification. Do not use electrical test equipment on any circuit related to the SRS AIRBAG system. For required servicing of the SRS AIRBAG, see your nearest SUBARU dealer.

■ Before checking or servicing in the engine compartment

- Always stop the engine and set the parking brake firmly to prevent the vehicle from moving.
- Always let the engine cool down. Engine parts become very hot when the engine is running and remain hot for some time after the engine is stopped.
- Do not spill engine oil, engine coolant, brake fluid or any other fluid on hot engine components. This may cause a fire.
- Always remove the key from the ignition switch. When the ignition switch is in the "ON" position, the cooling fan may operate suddenly even when the engine is stopped.

■ When you do the checking or servicing in the engine compartment while the engine is running

- A running engine can be dangerous. Keep your fingers, hands, clothing, hair and tools away from the cooling fan, belts and any other moving engine parts. Removing rings, watches and ties is advisable.

Downloaded from www.Manualslib.com manuals search engine

Engine compartment overview

■ 2.5 Liter vehicles

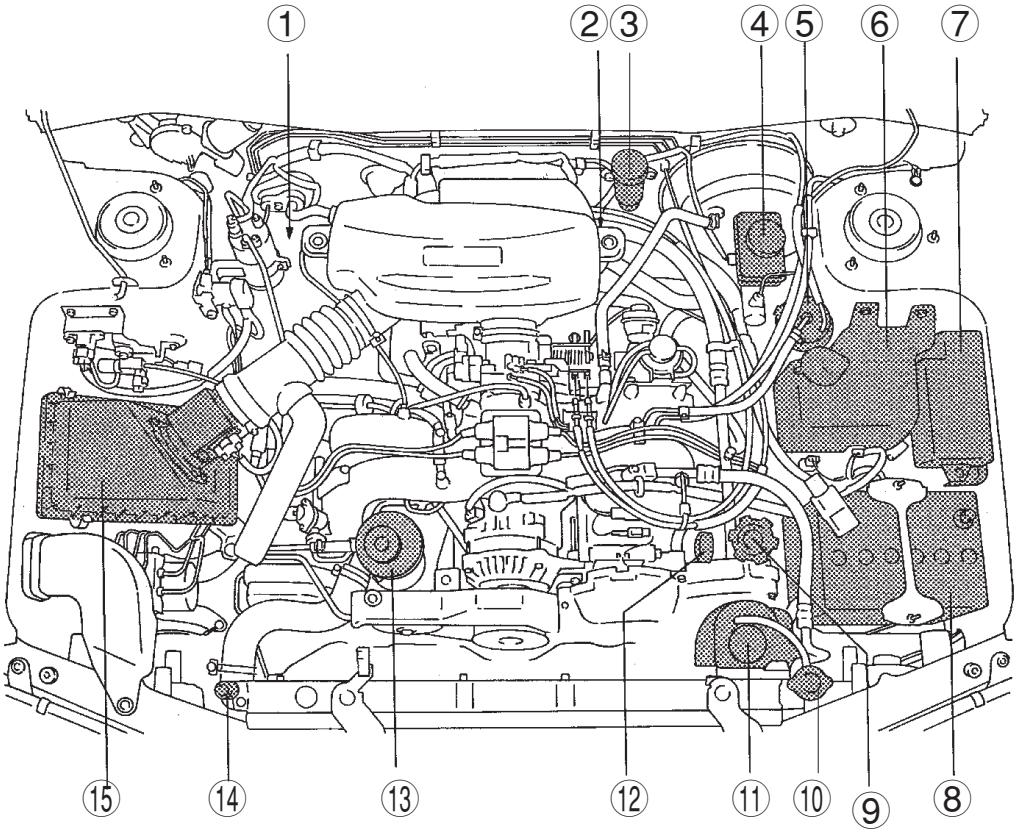

HB0351

① Manual transmission oil level gauge (MT) (page 10-24) or Differential gear oil level gauge (AT) (page 10-27)
② Automatic transmission fluid level gauge (page 10-25)
③ Clutch fluid reservoir (2.5L, MT) (page 10-34)
④ Brake fluid reservoir (page 10-32)
⑤ Fuel filter
⑥ Windshield washer tank (page 10-37)
⑦ Fuse box (page 10-49)
⑧ Battery (page 10-36)
⑨ Engine oil filler cap (page 10-9)
⑩ Radiator cap (page 10-14)
⑪ Engine coolant reservoir (page 10-14)
⑫ Engine oil level gauge (page 10-9)
⑬ Power steering fluid reservoir (page 10-30)
⑭ Air vent plug (Page 10-16)
⑮ Air cleaner (page 10-20)

– CONTINUED –

Downloaded from www.Manualslib.com manuals search engine

■ 2.2 Liter vehicles (except California specification)

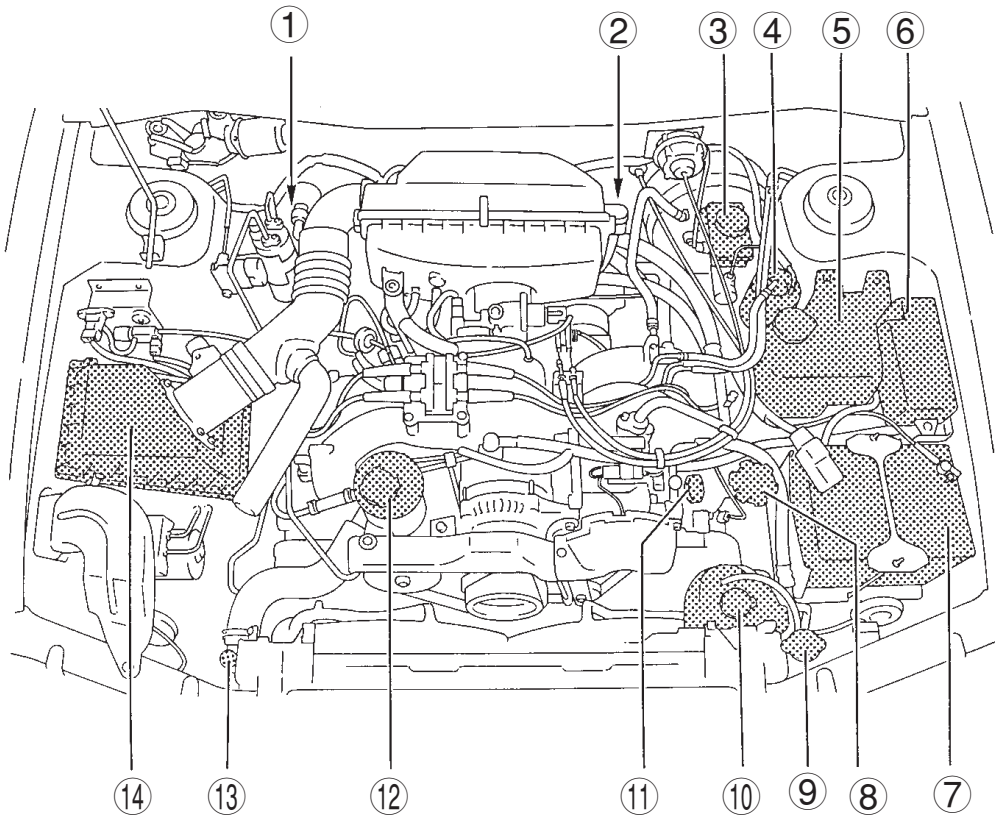

HBA011BB

① Manual transmission oil level gauge (MT) (page 10-24) or Differential gear oil level gauge (AT) (page 10-27)
② Automatic transmission fluid level gauge (page 10-25)
③ Brake fluid reservoir (page 10-32)
④ Fuel filter
⑤ Windshield washer tank (page 10-37)
⑥ Fuse box (page 10-49)
⑦ Battery (page 10-36)
⑧ Engine oil filler cap (page 10-9)
⑨ Radiator cap (page 10-14)
⑩ Engine coolant reservoir (page 10-14)
⑪ Engine oil level gauge (page 10-9)
⑫ Power steering fluid reservoir (page 10-30)
⑬ Air vent plug (Page 10-16)
⑭ Air cleaner (page 10-20)

Downloaded from www.Manualslib.com manuals search engine

■ 2.2 Liter vehicles (California specification)

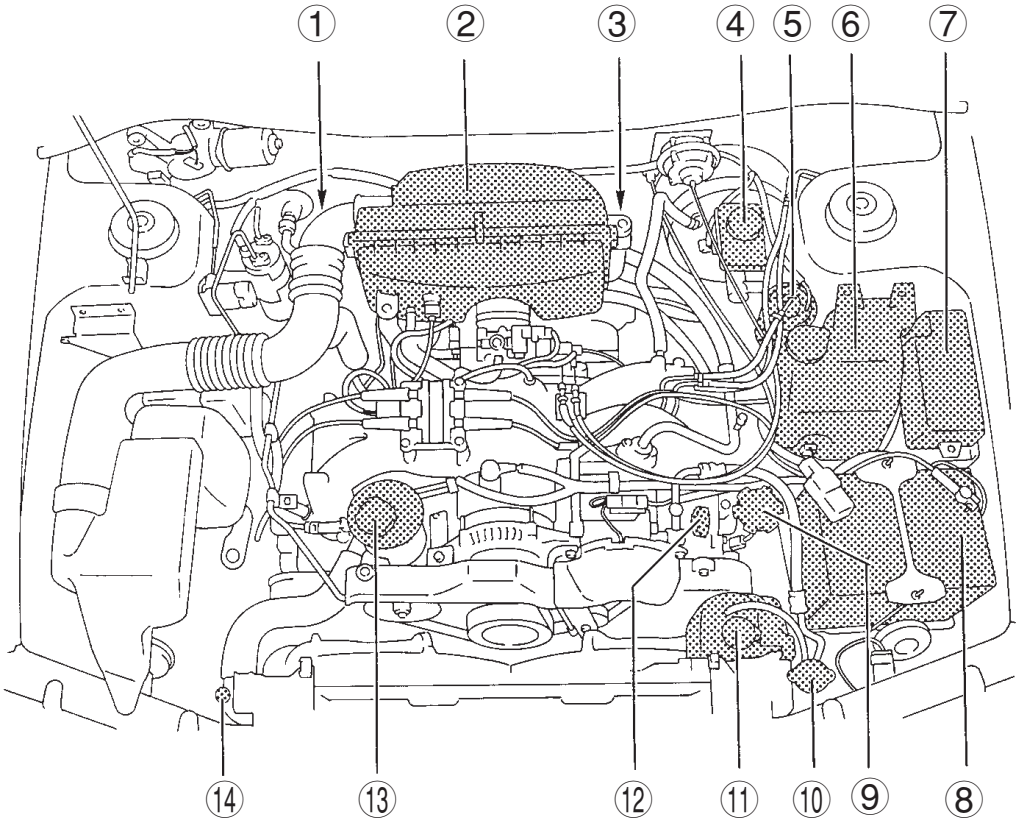

HBA012BB

① Manual transmission oil level gauge (MT) (page 10-24) or Differential gear oil level gauge (AT) (page 10-27)
② Air cleaner (page 10-20)
③ Automatic transmission fluid level gauge (page 10-25)
④ Brake fluid reservoir (page 10-32)
⑤ Fuel filter
⑥ Windshield washer tank (page 10-37)
⑦ Fuse box (page 10-49)
⑧ Battery (page 10-36)
⑨ Engine oil filler cap (page 10-9)
⑩ Radiator cap (page 10-14)
⑪ Engine coolant reservoir (page 10-14)
⑫ Engine oil level gauge (page 10-9)
⑬ Power steering fluid reservoir (page 10-30)
⑭ Air vent plug (Page 10-16)

Downloaded from www.Manualslib.com manuals search engine

Engine, transmission, and differential gear oil leaks

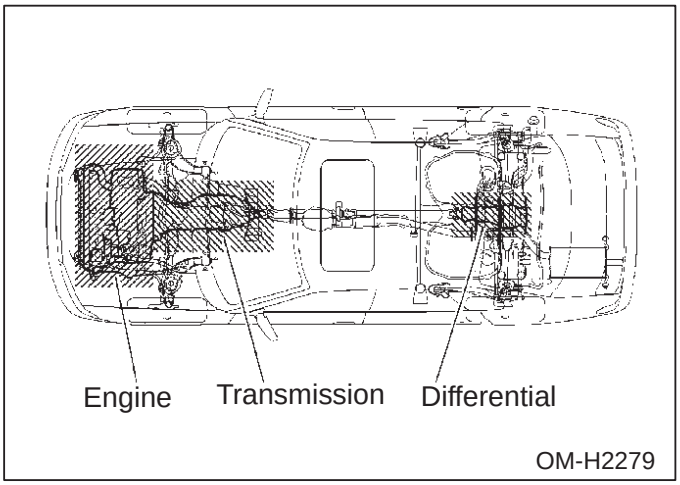

Inspect the following for oil leaks:

- Oil pan mating area
- Oil filter mating area
- Mating area between the engine and transmission
- Around the rear differential case cover (AWD vehicles only)
- Each drain plug and filler plug

If you find any leaks, contact your SUBARU dealer.

Downloaded from www.Manualslib.com manuals search engine

Engine oil

⚠ WARNING

Never let engine oil contact your eyes because engine oil can be harmful to your eyes. If engine oil gets in your eyes, immediately flush them thoroughly with clean water. For safety, when performing this work, wearing eye protection is advisable.

■ Checking the oil level

Check the engine oil level at each fuel stop.

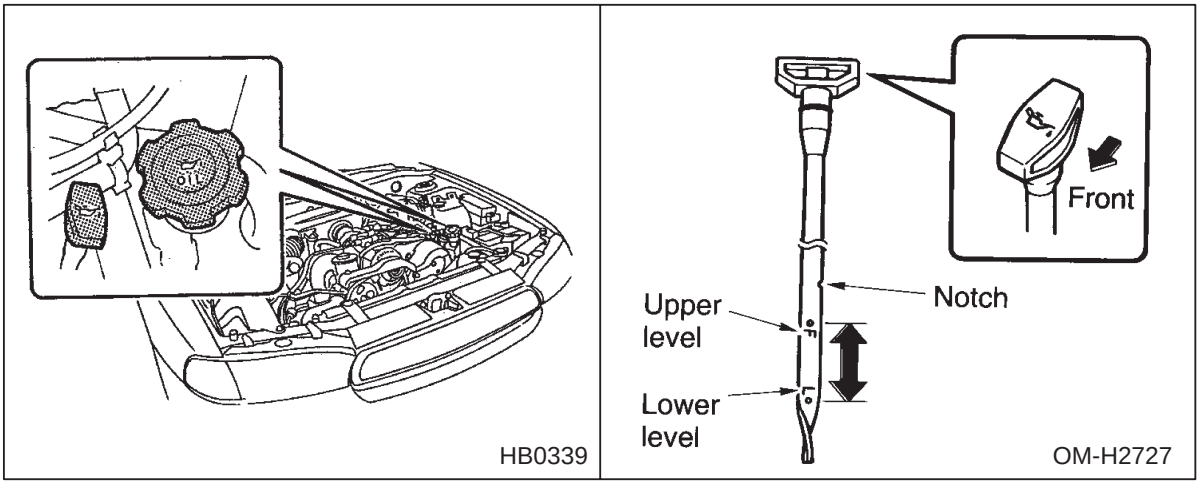

1. Park the vehicle on a level surface and stop the engine.
2. Pull out the dipstick, wipe it clean, and insert it again.
3. Be sure the dipstick is correctly inserted until it stops with the graphic symbol on its top appearing as shown in the illustration.
4. Pull out the dipstick again and check the oil level on it. If it is below the lower level, add oil to bring the level up to the upper level.

⚠ CAUTION

Use only engine oil with the recommended grade and viscosity.

If you check the oil level just after stopping the engine, wait a few minutes for the oil to drain back into the oil pan before checking the level.

Just after driving or while the engine is warm, the engine oil level reading

– CONTINUED –

Downloaded from www.Manualslib.com manuals search engine

may be in a range between the upper level and the notch mark. This is caused by thermal expansion of the engine oil.

To prevent overfilling the engine oil, do not add any additional oil above the upper level when the engine is cold.

■ Changing the oil and oil filter

Change the oil and oil filter according to the maintenance schedule in the warranty and maintenance booklet.
The engine oil and oil filter must be changed more frequently than listed in the maintenance schedule when driving on dusty roads, when short trips are frequently made when towing a trailer, or when driving in extremely cold whether.

1. Warm up the engine by letting the engine idle for about 10 minutes to ease draining the engine oil.
2. Park the vehicle on a level surface and stop the engine.
3. Remove the oil filler cap.

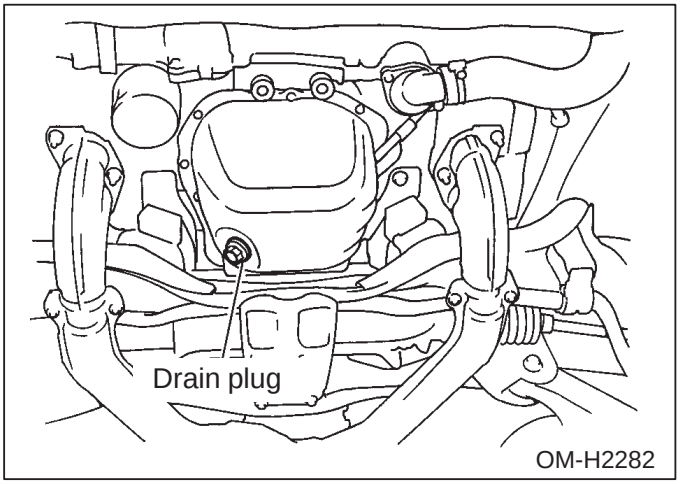

4. Drain out the engine oil by removing the drain plug while the engine is still warm. The used oil should be drained into an appropriate container and disposed of properly.

⚠ WARNING
Be careful not to burn yourself with hot engine oil.

Downloaded from www.Manualslib.com manuals search engine

5. Wipe the seating surface of the drain plug with a clean cloth and tighten it securely with a new sealing washer after the oil has completely drained out.

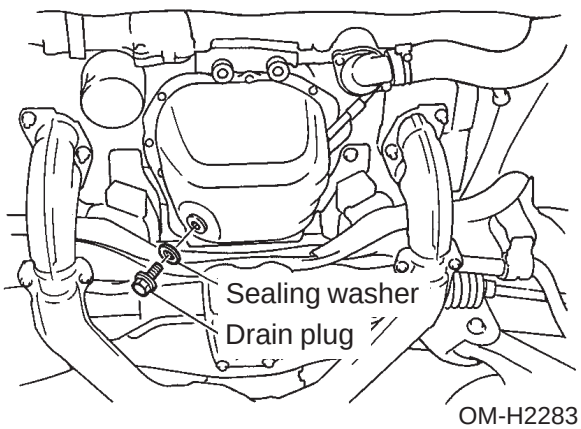

OM-H2283

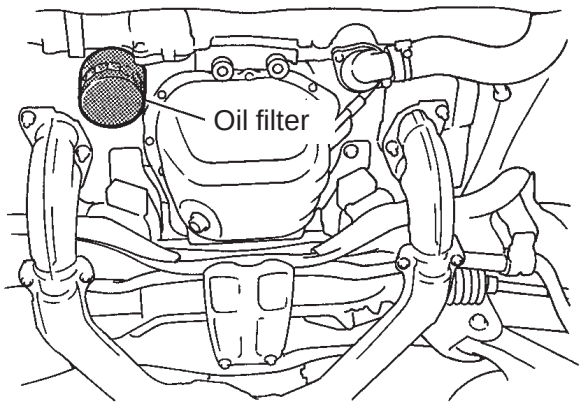

OM-H2284

6. Remove the under cover. (if so equipped)
7. Remove the oil filter with an oil filter wrench.
8. Before installing a new oil filter, apply a thin coat of engine oil to the seal.
9. Clean the rubber seal seating area of the lower crank case and install the oil filter by hand turning. Be careful not to twist or damage the seal.
10. Tighten it approximately two-thirds of a turn after the seal makes contact with underside of the crank case.

> ⚠ **CAUTION**
> **Never over tighten the oil filter because that can result in an oil leak.**

11. Install the under cover.
12. Pour the specified amount of engine oil through the filler neck.

Oil capacity
2.2 Liter models: 4.2 US qt (4.0 liters, 3.5 Imp qt)
2.5 Liter models: 4.8 US qt (4.5 liters, 4.0 Imp qt)

---

13. Start the engine and make sure that no oil leaks appear around the

– CONTINUED –

Downloaded from www.Manualslib.com manuals search engine

filter's rubber seal.
14. Run the engine until it reaches the normal operating temperature. Then stop the engine and wait a few minutes to allow the oil drain back. Check the oil level again and if necessary, add more engine oil.

■ Recommended grade and viscosity

⚠ CAUTION
Use only engine oil with the recommended grade and viscosity.

Oil grade: **API classification SJ or SH with the words "ENERGY CONSERVING II" (if you cannot obtain the oil with SJ or SH grade, you may use SG grade oil.) or the new API mark certification mark (Starbrust mark) displayed on the container.**

API Service label

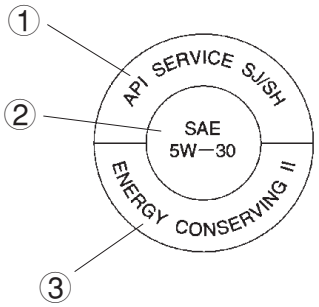

New API Certification Mark (Starbrust Mark)

① Indicates the oil quality by API designations
② Indicates the SAE oil viscosity grade
③ Indicates that the oil has fuel saving capabilities

In choosing an oil, you want the proper quality and viscosity, as well as one that will add to fuel economy. The following table lists the recommended viscosities and applicable temperatures.
When adding oil, different brands may be used together as long as they are the same API classification and SAE viscosity as those recommended by SUBARU.

Engine oil viscosity (thickness) affects fuel economy. Oils of lower vis-

Downloaded from www.Manualslib.com manuals search engine

cosity provide better fuel economy. However, in hot weather, oil of higher viscosity is required to properly lubricate the engine.

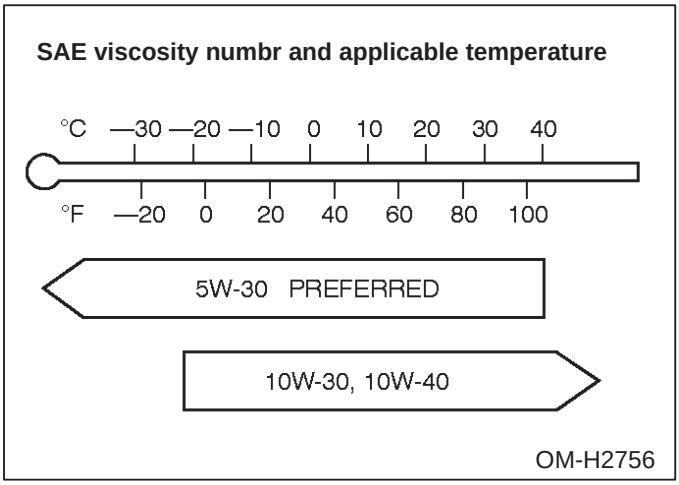

■ Recommended grade and viscosity under severe driving conditions

If the vehicle is used in desert areas, in areas with very high temperatures, or used for heavy-duty applications such as a towing a trailer, use of oil with the following grade and viscosities is recommended.

API classification SJ or SH:
SAE viscosity No.: 30, 40, 10W-50, 20W-40, 20W-50

Downloaded from www.Manualslib.com manuals search engine

Cooling system, hoses and connections

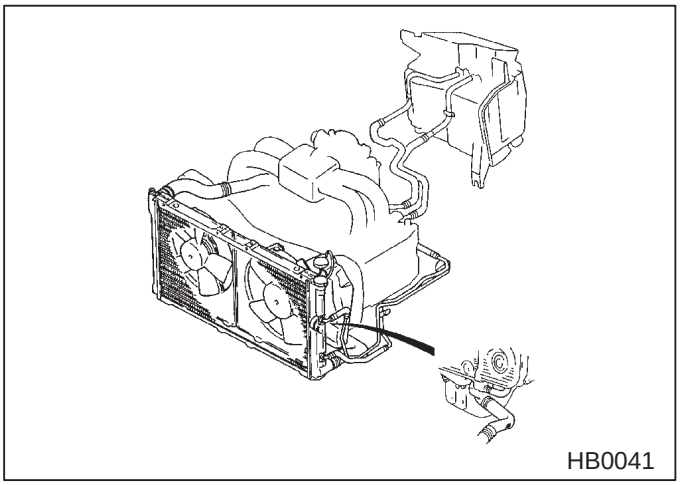

Your vehicle employs an electric cooling fan which is thermostatically controlled to operate when the engine coolant reaches a specific temperature.
If the radiator cooling fan does not operate even when the engine coolant temperature gauge exceeds the normal operating range, the circuit of the cooling fan may be defective. Check the fuse and replace it if necessary. If the fuse is not blown, have the cooling system checked by your SUBARU dealer.

If frequent addition of coolant is necessary, there may be a leak in the engine cooling system. It is recommended that the cooling system and connections be checked for leaks, damage, or looseness.

Engine coolant

■ Checking the coolant level

⚠ WARNING

- **Never attempt to remove the radiator cap until the engine has been shut off and has cooled down completely. Since the coolant is under pressure, you may suffer serious burns by a spray of boiling hot coolant when the cap is removed.**

Downloaded from www.Manualslib.com manuals search engine

- **Never let engine coolant contact your eyes because engine coolant can be harmful to your eyes. If engine coolant gets in your eyes, immediately flush them thoroughly with clean water. For safety, when performing this work, wearing eye protection is advisable.**

Check the coolant level at each fuel stop.

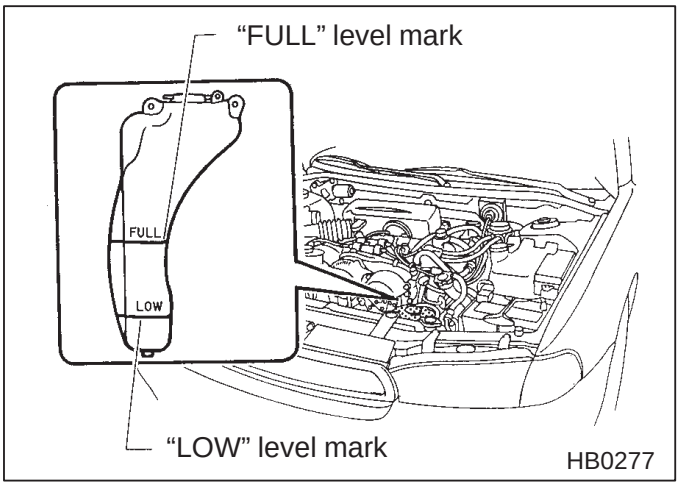

1. Check the coolant level on the outside of the reservoir while the engine is cool.
2. If the level is close to or lower than the "LOW" level mark, add coolant up to the "FULL" level mark. If the reserve tank is empty, remove the radiator cap and refill as required.

⚠ CAUTION

- **The cooling system has been filled at the factory with a high quality, corrosion-inhibiting, year-around coolant which provides protection against freezing down to –33°F (–36°C). For adding, use genuine SUBARU coolant or an equivalent: a mixture of 50% soft water and 50% ethylene-glycol basis coolant. Use of improper coolants may result in corrosion in the cooling system. It is important to maintain protection against freezing and corrosion, even if freezing temperatures are not expected. Never mix different kinds of coolant.**

– CONTINUED –

Downloaded from www.Manualslib.com manuals search engine

- **Do not splash the engine coolant over painted parts. The alcohol contained in the engine coolant may damage the paint surface.**

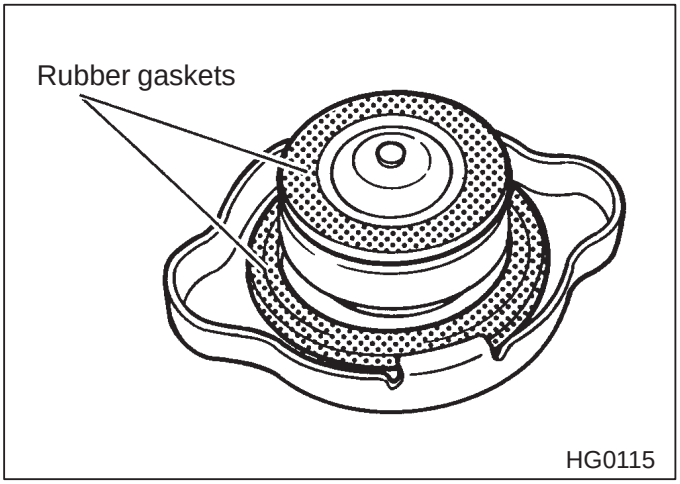

3. After refilling the reserve tank and the radiator, reinstall the caps and check that the rubber gasket inside the radiator cap is in the proper position.

■ Changing the coolant

⚠ WARNING

- **Never attempt to remove the radiator cap until the engine has been shut off and has cooled down completely. Since the coolant is under pressure, you may suffer serious burns by a spray of boiling hot coolant when the cap is removed.**
- **Never let engine coolant contact your eyes because engine coolant can be harmful to your eyes. If engine coolant gets in your eyes, immediately flush them thoroughly with clean water. For safety, when performing this work, wearing eye protection is advisable.**

Downloaded from www.Manualslib.com manuals search engine

⚠ CAUTION

- **The cooling system has been filled at the factory with a high-quality, corrosion-inhibiting, year-around coolant which provides protection against freezing down to –33°F (–36°C). Use the recommended coolant only. Use of improper coolants may result in corrosion in the cooling system. It is important to maintain protection against freezing and corrosion, even if freezing temperatures are not expected. Never mix different kinds of coolant.**
- **Do not splash the engine coolant over painted parts. The alcohol contained in the engine coolant may damage the paint surface.**

Change the engine coolant in the following procedures according to the maintenance schedule in the warranty and maintenance booklet.

1. Place a proper container under the drain plug and loosen the drain plug.

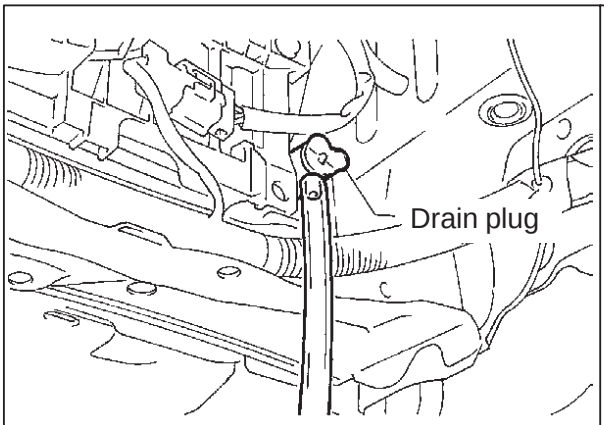

OM-H2288

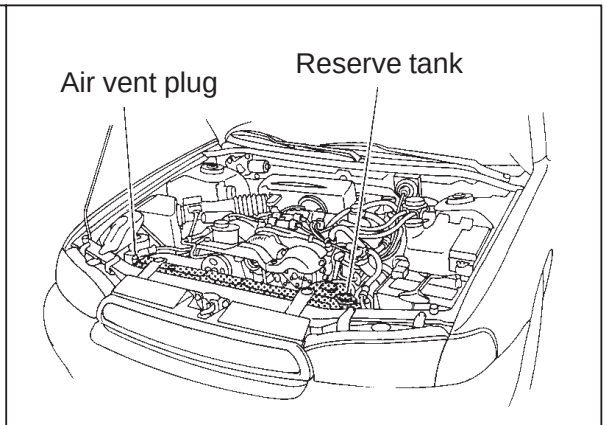

HB0278

2. Loosen the radiator cap to drain the coolant from the radiator. Then drain the coolant from the reserve tank. Tighten the drain plug securely.

– CONTINUED –

Downloaded from www.Manualslib.com manuals search engine

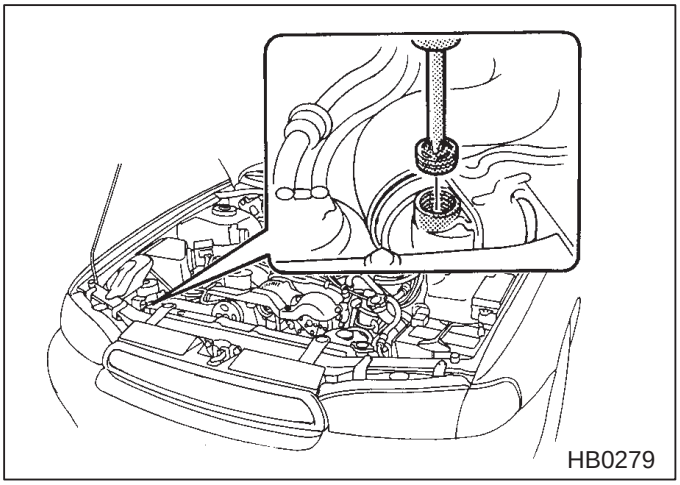

3. Remove the air vent plug from the radiator.

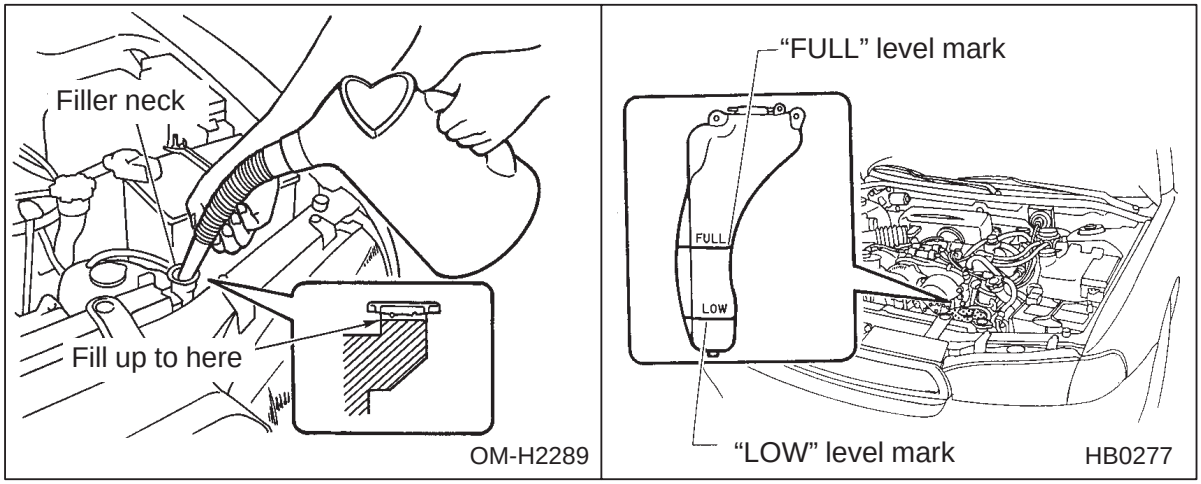

4. Slowly pour the coolant and fill to the radiator filler neck and to the reserve tank's "FULL" level mark. Do not pour the coolant too quickly, as this may lead to insufficient air bleeding and trapped air in the system.

Coolant capacity
- 2.2 Liter models: 6.2 US qt (5.8 liters, 5.2 Imp qt)
- 2.5 Liter models: 6.3 US qt (6.0 liters, 5.3 Imp qt)

---

5. Put the air vent plug back on and tighten firmly.

Downloaded from www.Manualslib.com manuals search engine

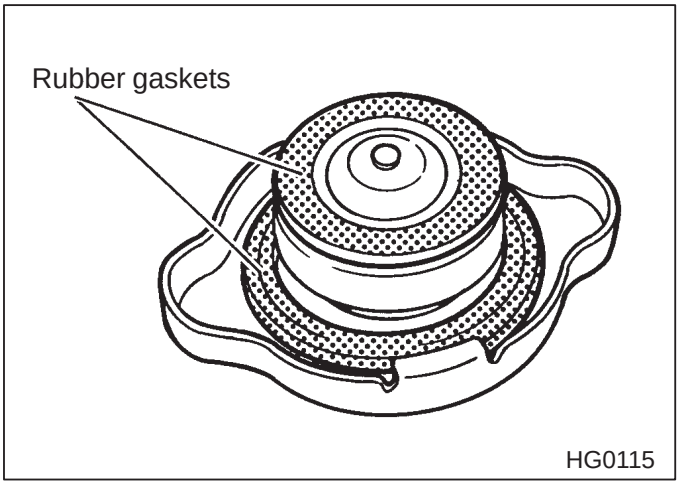

6. Put the radiator cap back on and tighten firmly. At this time, make sure that the rubber gasket in the radiator cap is correctly in place.
7. Start and run the engine for more than five minutes at 2,000 to 3,000 rpm.
8. Stop the engine and wait until the coolant cools down (122 to 140°F [50 to 60 °C]). If there is any loss of coolant, add coolant to the radiator's filler neck and to the reserve tank's "Full" level.
9. Put the radiator cap and reservoir cap back on and tighten firmly.

Downloaded from www.Manualslib.com manuals search engine

Air cleaner element

> **⚠ WARNING**
> **Do not operate the engine with the air cleaner element removed. The air cleaner element not only filters intake air but also stops flames if the engine backfires. If the air cleaner element is not installed when the engine backfires, you could be burned.**

The air cleaner element functions as a filter screen. When the element is perforated or removed, engine wear will be excessive and engine life shortened.

The air cleaner element is a viscous type. It is unnecessary to clean or wash the element.

■ Replacing the air cleaner element

Replace the air cleaner element according to the maintenance schedule in the warranty and maintenance booklet. Under extremely dusty conditions, replace it more frequently. It is recommended that you always use genuine SUBARU parts.

▼ For 2.5 Liter vehicles and 2.2 Liter vehicles (except California specification)

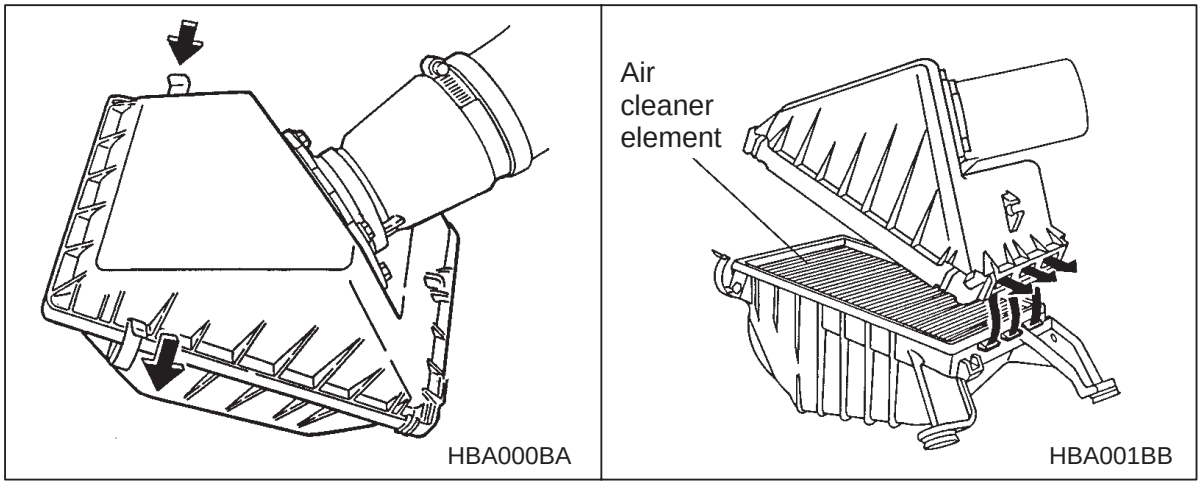

1. Unsnap the two clamps holding the air cleaner case cover.
2. Open the air cleaner case cover and remove the air cleaner ele-

Downloaded from www.Manualslib.com manuals search engine

ment.

3. Clean the inside of the air cleaner cover and case with a damp cloth and install a new air cleaner element.

4. To install the air cleaner case cover, insert three projections on the air cleaner case into the slits on the cleaner case cover and then snap the two clamps on the air cleaner case cover.

▼ For 2.2 Liter vehicles (California specification)

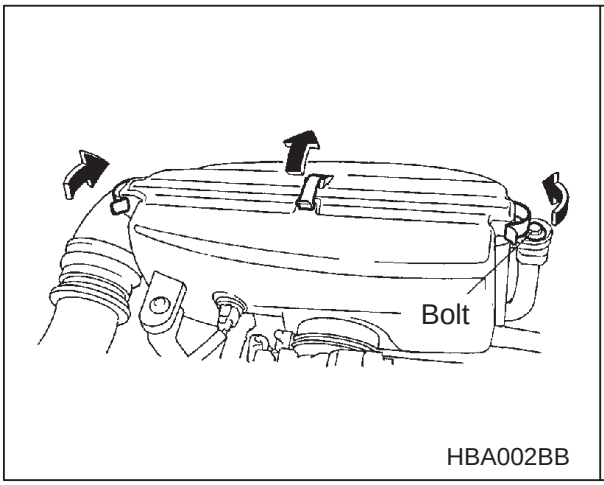

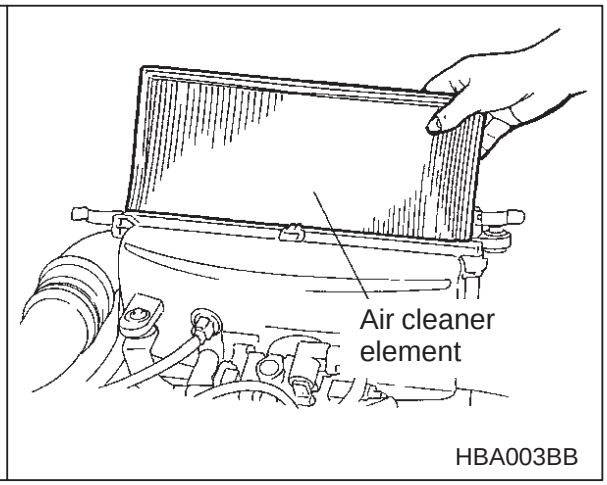

1. Remove the bolt securing the rear air cleaner element case.

2. Unsnap the three clamps holding the rear air cleaner element case.

3. Separate the air cleaner element cases and remove the air cleaner element.

4. Clean the inside of the air cleaner element case with a damp cloth and install a new air cleaner element.

5. Insert the four projections on the rear air cleaner element case into the slits on the front air cleaner element case and snap the three clamps on the rear air cleaner element case and then tighten the bolt.

Downloaded from www.Manualslib.com manuals search engine

Spark plugs

■ Replacing the spark plug

⚠ CAUTION

- **When disconnecting the spark plug cables, always grasp the spark plug cap, not the cables.**
- **Make sure the cables are replaced in the correct order.**

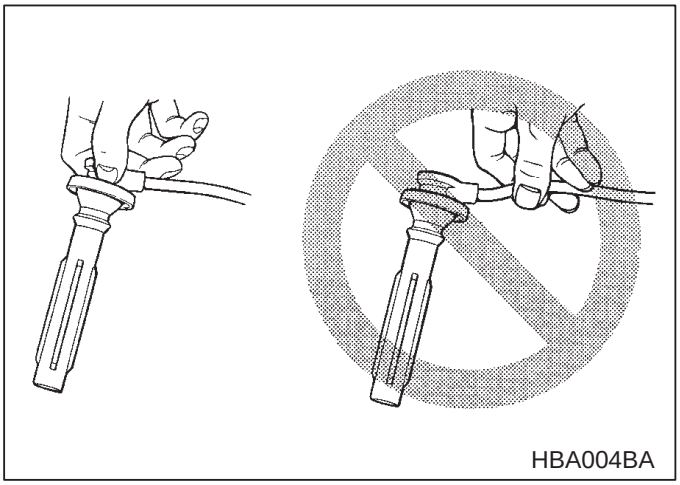

Replace the spark plugs according to the maintenance schedule in the warranty and maintenance booklet.

■ Recommended spark plugs

2.2 Liter models
RC10YC4 (Champion)
[Alternate]
BKR5E-11 (NGK)
2.5 Liter models
PFR5B-11 (NGK)
[Alternate]
RC10P4A (Champion)

Downloaded from www.Manualslib.com manuals search engine

Drive belts

■ Inspection

The alternator, power steering pump, and air conditioner compressor depend on drive belts. Satisfactory performance requires that belt tension be correct.

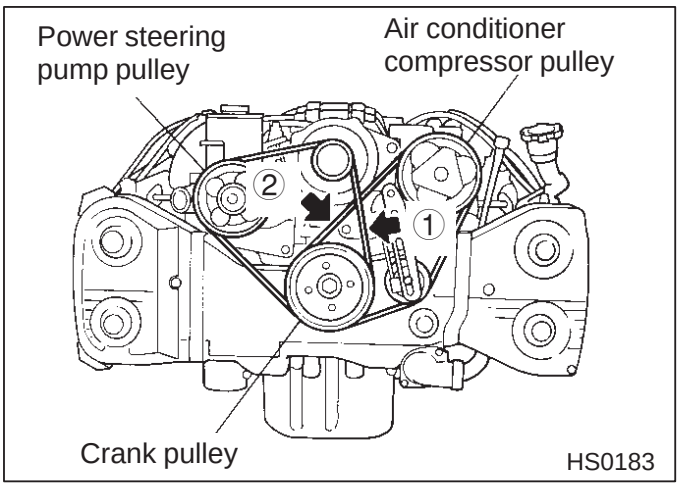

in. (mm)

	Deflection	
	New belt	Used belt
①	0.28 — 0.35 (7.0 — 9.0)	0.35 — 0.43 (9.0 — 11.0)
②	0.30 — 0.33 (7.5 — 8.5)	0.35 — 0.40 (9.0 — 10.0)

To check belt tension, place a straightedge (ruler) across two adjacent pulleys and apply a force of 98 N (22 lb, 10 kg) midway between the pulleys by using a spring scale. Belt deflection should be the amount specified. If a belt is loose, cracked, or worn, contact your SUBARU dealer.

Downloaded from www.Manualslib.com manuals search engine

Manual transmission oil

⚠ WARNING

Never let transmission oil contact your eyes because transmission oil can be harmful to your eyes. If transmission oil gets in your eyes, immediately flush them thoroughly with clean water. For safety, when performing this work, wearing eye protection is advisable.

■ Checking the oil level

Check the oil level monthly.

1. Park the vehicle on a level surface and stop the engine.

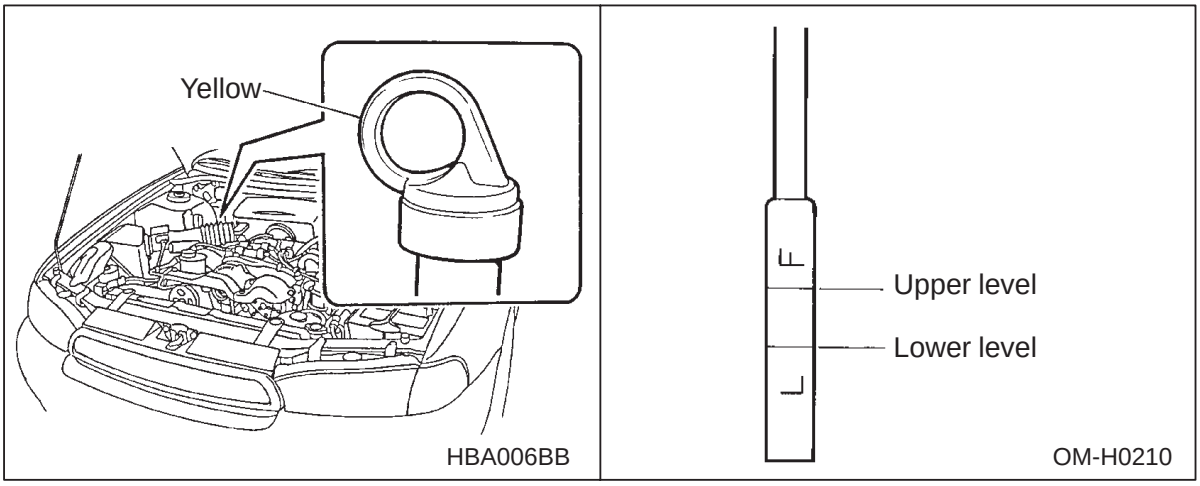

2. Pull out the dipstick, wipe it clean, and insert it again.
3. Pull out the dipstick again and check the oil level on it. If it is below the lower level, add oil through the dipstick hole to bring the level up to the upper level.

■ Recommended grade and viscosity

Each oil manufacturer has its own base oils and additives. Never use different brands together.

Oil grade: API classification GL-5

Downloaded from www.Manualslib.com manuals search engine

SAE viscosity No. and Applicable Temperature

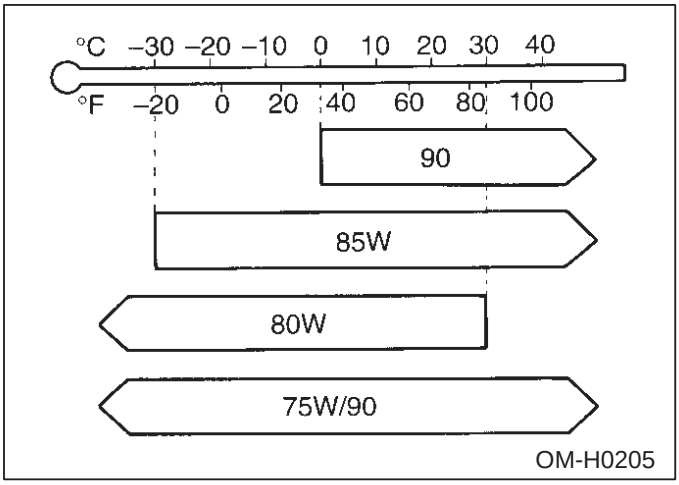

Automatic transmission fluid

⚠ WARNING

Never let automatic transmission fluid contact your eyes because automatic transmission fluid can be harmful to your eyes. If automatic transmission fluid gets in your eyes, immediately flush them thoroughly with clean water. For safety, when performing this work, wearing eye protection is advisable.

The automatic transmission fluid expands largely as its temperature rises; the fluid level differs according to fluid temperature. Therefore, there are two different scales for checking the level of hot fluid and cold fluid on each side of the dipstick.

Though the fluid level can be checked without warming up the fluid on the “COLD” side, we recommend checking the fluid level when the fluid is operating temperature.

■ Checking the fluid level when the fluid is hot

Check the fluid level monthly.

1. Drive the vehicle several miles to raise the temperature of the transmission fluid up to normal operating temperature; 140 to 176°F (60 to 80

– CONTINUED –

Downloaded from www.Manualslib.com manuals search engine

°C) is normal.

2. Park the vehicle on a level surface and set the parking brake.

3. First shift the selector lever in each position. Then shift it in the “P” position, and run the engine at idling speed.

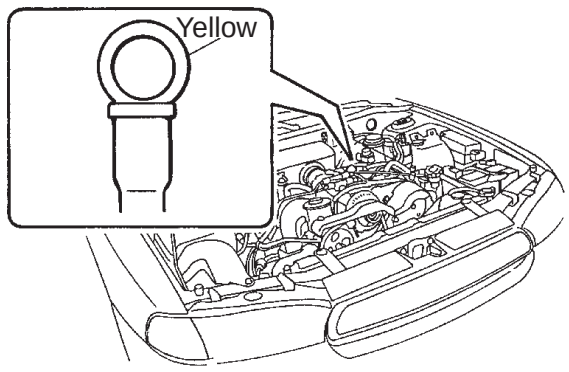

HBA007BB

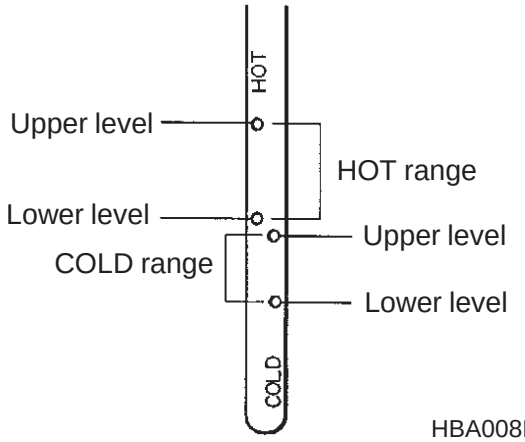

HBA008BB

4. Pull out the dipstick and check the fluid level on the gauge. If it is below the lower level on the “HOT” range, add the recommended automatic transmission fluid up to the upper level.

■ Checking the fluid level when the fluid is cold

When the fluid level has to be checked without time to warm up the automatic transmission, check to see that the fluid level is between the lower level and upper level on the “COLD” range. If it is below that range, add fluid up to the upper level. Be careful not to overfill.

■ Recommended fluid

“Dexron II” or “Dexron III” Type Automatic Transmission Fluid

Downloaded from www.Manualslib.com manuals search engine

Front differential gear oil (Automatic transmission)

■ Checking the oil level

⚠ WARNING

Never let differential oil contact your eyes because differential oil can be harmful to your eyes. If differential oil gets in your eyes, immediately flush them thoroughly with clean water. For safety, when performing this work, wearing eye protection is advisable.

Check the differential oil level monthly.

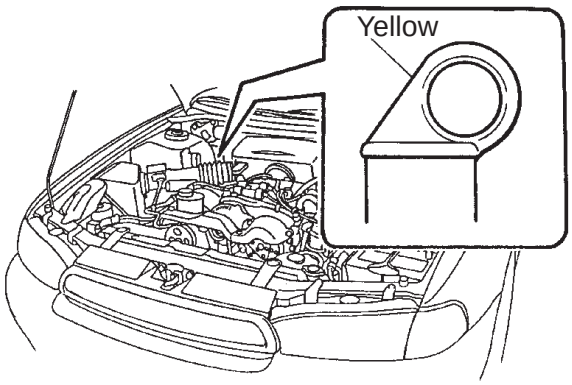

HBA009BB

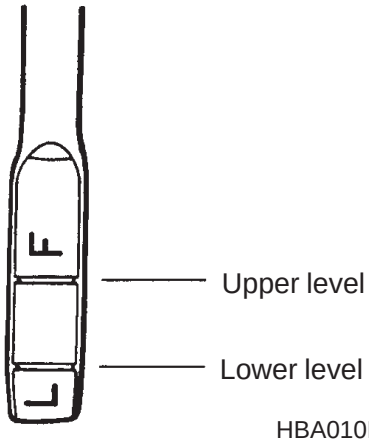

HBA010BB

1. Park the vehicle on a level surface and stop the engine.
2. Pull out the dipstick, wipe it clean, and insert it again.
3. Pull out the dipstick again and check the oil level on it. If it is below the lower level, add oil to bring the level up to the upper level.

■ Recommended grade and viscosity

Each oil manufacturer has its own base oils and additives. Never use different brands together.

Oil grade: API classification GL-5

– CONTINUED –

Downloaded from www.Manualslib.com manuals search engine

SAE viscosity No. and Applicable Temperature

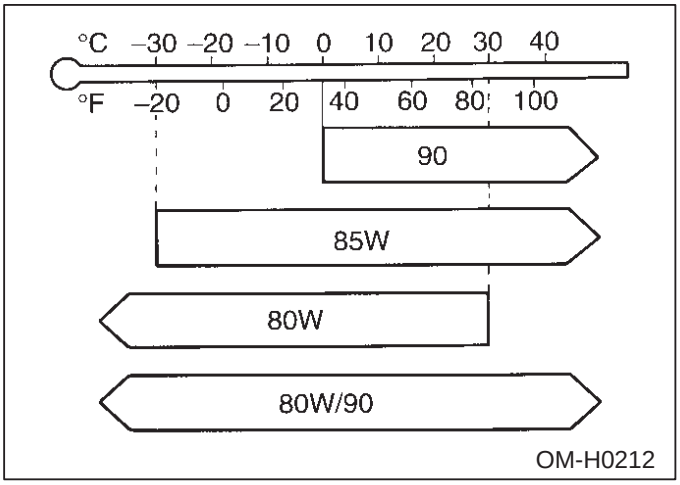

Rear differential gear oil (AWD vehicles)

■ Checking the oil level

⚠ WARNING

Never let differential oil contact your eyes because differential oil can be harmful to your eyes. If differential oil gets in your eyes, immediately flush them thoroughly with clean water. For safety, when performing this work, wearing eye protection is advisable.

⚠ CAUTION

If the vehicle requires frequent refilling, there may be an oil leak. If you suspect a problem, have the vehicle checked at your SUBARU dealer.

Downloaded from www.Manualslib.com manuals search engine

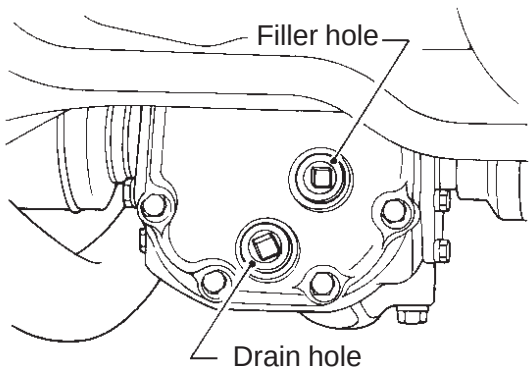

HB0077

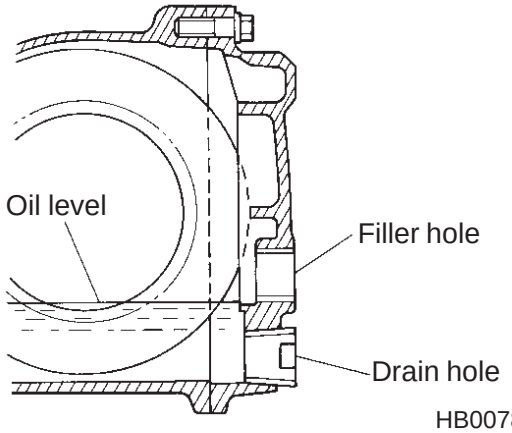

HB0078

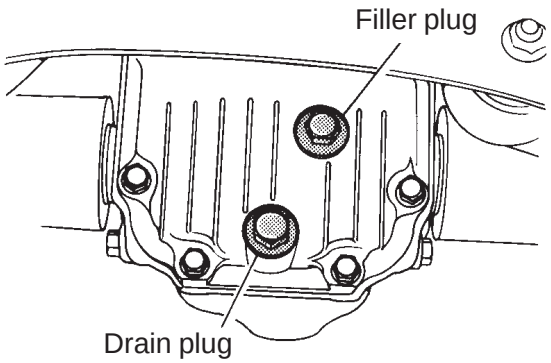

OM-H0213

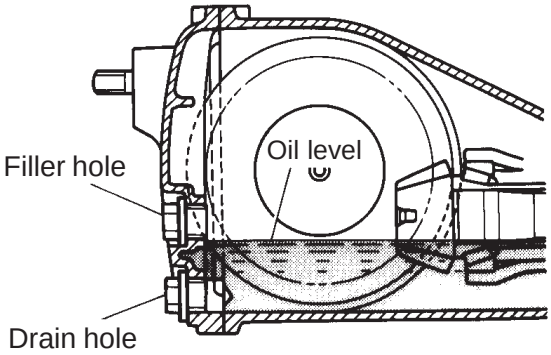

OM-H0214

Remove the plug from the filler hole and check the oil level. The oil level should be kept even with the bottom of the filler hole. If the oil level is below the bottom edge of the hole, add oil through the filler hole to raise the level.

■ Recommended grade and viscosity

Each oil manufacturer has its own base oils and additives. Never use different brands together.

Oil grade: API classification GL-5

– CONTINUED –

Downloaded from www.Manualslib.com manuals search engine

SAE viscosity No. and Applicable Temperature

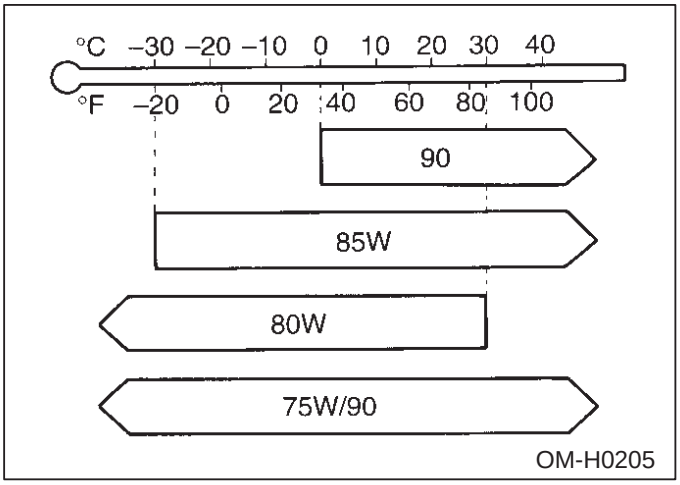

Power steering fluid

⚠ WARNING

Never let power steering fluid contact your eyes because power steering fluid can be harmful to your eyes. If power steering fluid gets in your eyes, immediately flush them thoroughly with clean water. For safety, when performing this work, wearing eye protection is advisable.

The power steering fluid expands largely as its temperature rises; the fluid level differs according to fluid temperature. Therefore, the dipstick has two different checking ranges for hot and cold fluids on it.

■ Checking the fluid level when the fluid is hot

⚠ WARNING

Be careful not to burn yourself because the fluid may be hot.

Downloaded from www.Manualslib.com manuals search engine

⚠ CAUTION

- **When power steering fluid is being added, use only clean fluid, and be careful not to allow any dirt into the tank. And never use different brands together.**
- **Avoid spilling fluid when adding it in the tank.**

Check the power steering fluid level monthly.

1. Drive the vehicle several miles to raise the temperature of the power steering fluid up to normal operating temperature, about 140°F (60°C).
2. Park the vehicle on a level surface, and stop the engine.
3. Turn the reservoir cap counterclockwise to remove the fluid level dipstick, wipe the dipstick clean, and reinsert it.

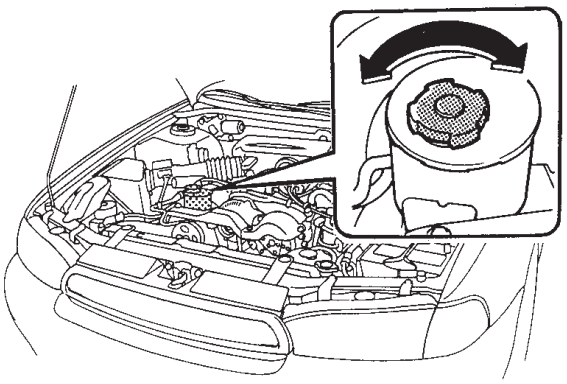

HB0280

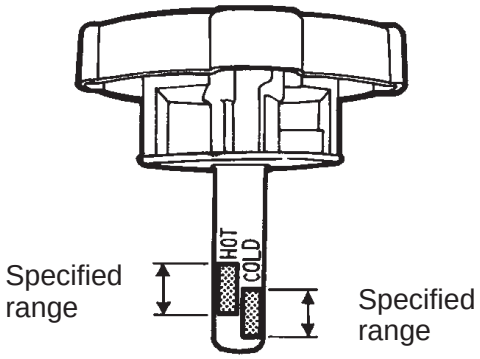

OM-H2461

4. Remove the dipstick again and check the fluid level on it. If it is below the lower level of the “HOT” range, add the recommended steering fluid up to the specified range of the dipstick.

If the fluid level is extreme low, it may indicate possible leakage. Consult your SUBARU dealer for inspection.

■ Checking the fluid level when the fluid is cold

When the fluid level has to be checked without warming up the power steering system (approximately 70°F [21°C]), read the fluid level on the “COLD” range.

– CONTINUED –

Downloaded from www.Manualslib.com manuals search engine

■ Recommended fluid

“Dexron II”, “Dexron IIE” or “Dexron III” Type Automatic Transmission Fluid

Brake fluid

■ Checking the fluid level

⚠ WARNING

- **Never let brake fluid contanct your eyes because brake fluid can be harmful to your eyes. If brake fluid gets in your eyes, immediately flush them thoroughly with clean water. For safety, when performing this work, wearing eye protection is advisable.**
- **Brake fluid absorbs moisture from the air. Any absorbed moisture can cause a dangerous loss of braking performance.**
- **If the vehicle requires frequent refilling, there may be a leak. If you suspect a problem, have the vehicle checked at your SUBARU dealer.**

⚠ CAUTION

- **Never use different brands of brake fluid together.**
- **When adding brake fluid, be careful not to allow any dirt into the reservoir.**
- **Never splash the brake fluid over painted surfaces or rubber parts. Alcohol contained in the brake fluid may damage them.**

Check the fluid level monthly.

Downloaded from www.Manualslib.com manuals search engine

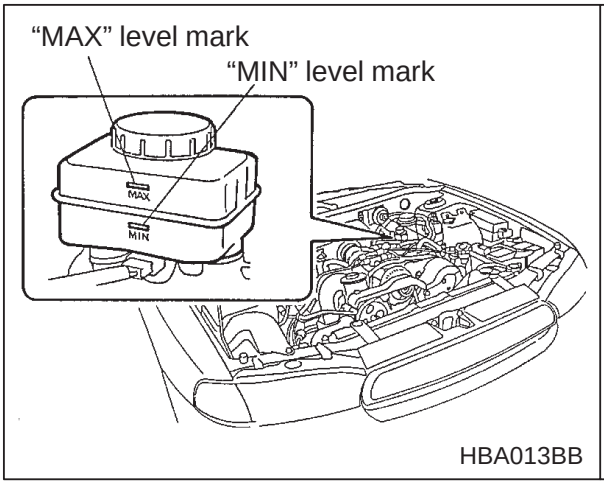

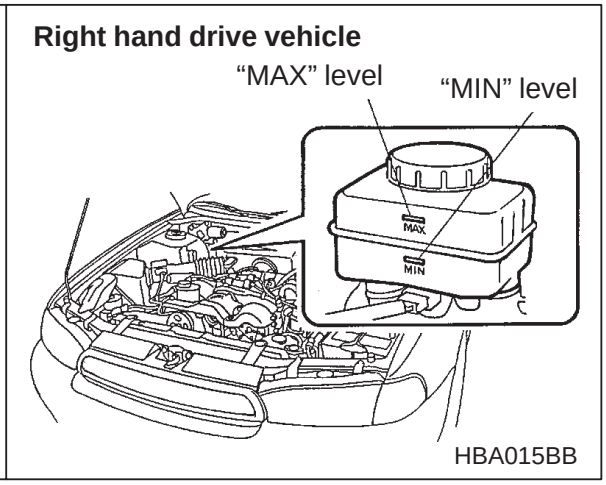

Check the fluid level on the outside of the reservoir. If the level is below "MIN", add the recommended brake fluid to "MAX".
Use only brake fluid from a sealed container.

■ Recommended brake fluid

FMVSS No. 116, fresh DOT 3 or 4 brake fluid

Downloaded from www.Manualslib.com manuals search engine

Clutch fluid (2.5 liter MT models)

⚠ WARNING

Never let clutch fluid contanct your eyes because clutch fluid can be harmful to your eyes. If clutch fluid gets in your eyes, immediately flush them thoroughly with clean water. For safety, when performing this work, wearing eye protection is advisable.

⚠ CAUTION

- **Clutch fluid absorbs moisture from the air. Any absorbed moisture can cause improper clutch operation.**
- **If the vehicle requires frequent refilling, there may be a leak. If you suspect a problem, have the vehicle checked at your SUBARU dealer.**
- **Never use different brands of clutch fluid together.**
- **When clutch fluid is added, be careful not to allow any dirt into the tank.**

Check the fluid level on the outside of the reservoir. If the level is below “MIN” level mark, add the recommended clutch fluid to “MAX” level mark. Use only clutch fluid from a sealed container.

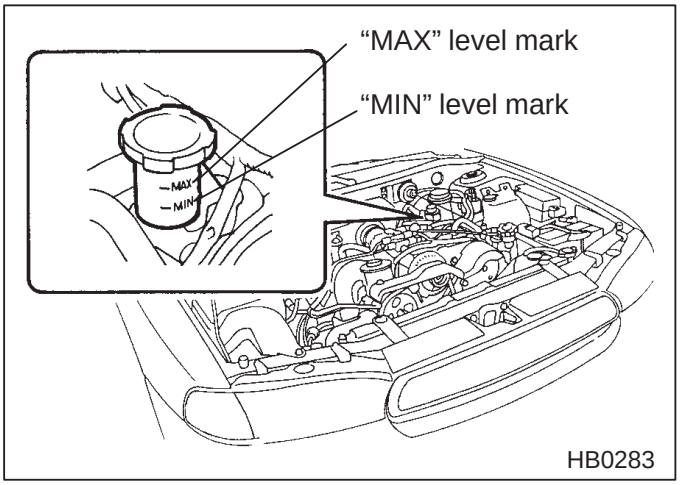

Downloaded from www.Manualslib.com manuals search engine

■ Recommended clutch fluid

FMVSS No. 116, fresh DOT 3 or 4 brake fluid

Brake booster

■ Checking brake booster operation

If the brake booster does not operate as described below, have it checked by your SUBARU dealer.

1. With the engine off, depress the brake pedal several times, applying the same pedal force each time. The distance the pedal travels should not vary.
2. With the brake pedal depressed, start the engine. The pedal should move slightly down to the floor.
3. With the brake pedal depressed, stop the engine and keep the pedal depressed for 30 seconds. The pedal height should not change.
4. Start the engine again and run for about one minute then turn it off. Depress the brake pedal several times to check the brake booster. Brake booster operates properly if the pedal stroke decreases with each depression.

Downloaded from www.Manualslib.com manuals search engine

Battery

⚠ WARNING

- **Before beginning work on or near any battery, be sure to extinguish all cigarettes, matches, and lighters. Never expose a battery to an open flame or electric sparks. Batteries give off a gas which is highly flammable and explosive.**
- **For safety, in case an explosion does occur, wear eye protection or shield your eyes when working near any battery. Never lean over a battery.**
- **Do not let battery fluid contact eyes, skin, fabrics, or paint because battery fluid is a corrosive acid. If battery fluid gets on your skin or in your eyes, immediately flush the area with water thoroughly. Seek medical help immediately if acid has entered the eyes.**
- **To lessen the risk of sparks, remove rings, metal watchbands, and other metal jewelry. Never allow metal tools to contact the positive battery terminal and anything connected to it WHILE you are at the same time in contact with any other metallic portion of the vehicle because a short circuit will result.**
- **Keep everyone including children away from the battery.**
- **Charge the battery in a well-ventilated area.**

⚠ CAUTION

Never use more than 10 amperes when charging the battery because it will shorten battery life.

Downloaded from www.Manualslib.com manuals search engine

Windshield washer fluid

⚠ CAUTION

Never use engine coolant as washer fluid because it could cause paint damage.

Check the level of the washer fluid at each fuel stop. If the level is low, fill the fluid up to the neck of the reservoir.
Use windshield washer fluid. If windshield washer fluid is unavailable use clean water.
In areas where water freezes in winter, use an anti-freeze type windshield washer fluid. SUBARU Windshield Washer Fluid contains 58.5% methyl alcohol and 41.5% surfactant, by volume. Its freezing temperature varies according to how much it is diluted, as indicated below.

Washer Fluid Concentration	Freezing Temperature
30%	10.4°F (–12°C)
50%	–4 °F (–20°C)
100%	–49°F (–45°C)

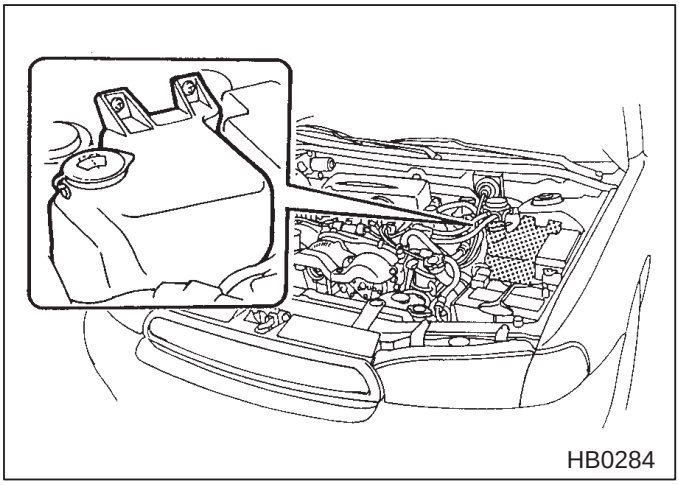

Downloaded from www.Manualslib.com manuals search engine

Replacement of windshield wiper blades

Grease, wax, insects, or other material on the windshield or the wiper blade results in jerky wiper operation and streaking on the glass. If you cannot remove those streaks after operating the windshield washer or if the wiper operation is jerky, clean the outer surface of the windshield (or rear window) and the wiper blades using a sponge or soft cloth with a neutral detergent or mild-abrasive cleaner. After cleaning, rinse the windshield and wiper blades with clean water. The windshield is clean if beads do not form when you rinse the windshield with water.

⚠ CAUTION

Do not clean the wiper blades with gasoline or a solvent, such as paint thinner or benzene. This will cause deterioration of the wiper blades.

If you cannot eliminate the streaking ever after following this method, replace the wiper blades using the following procedures:

1. Raise the wiper arm off the windshield.
2. Remove the wiper blade assembly by holding its pivot area and pushing it in the direction shown by the arrow while depressing the wiper blade stopper.

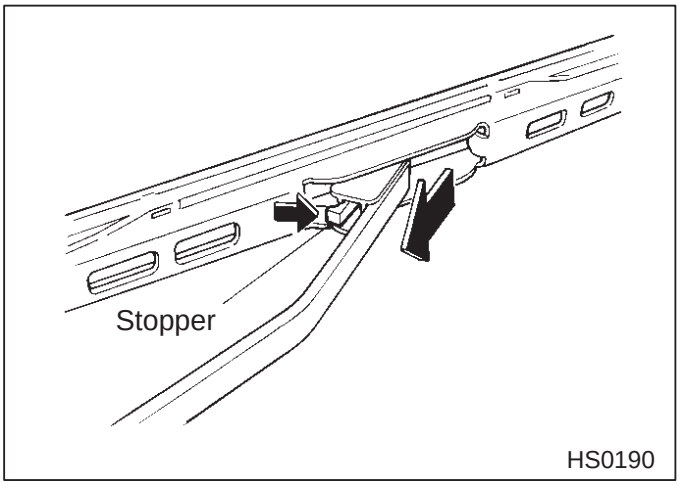

3. Grasp the locked end of the blade rubber assembly and pull it firmly until the stoppers on the rubber are free of the metal support.

Downloaded from www.Manualslib.com manuals search engine

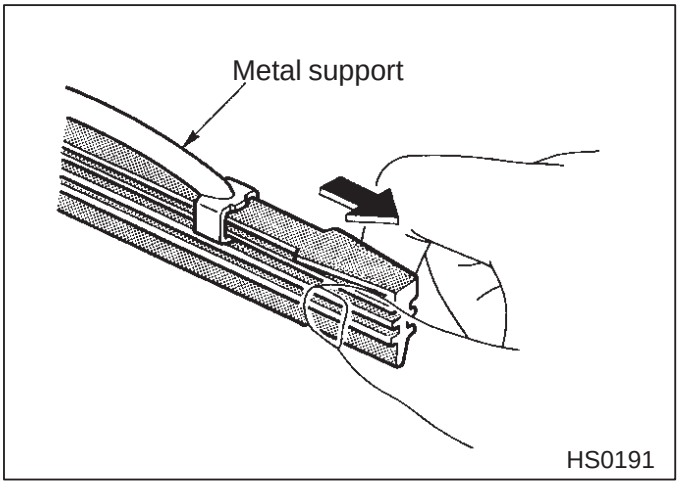

4. If the new blade rubber is not provided with two metal spines, remove the metal spines from the old blade rubber and install them in the new blade rubber.

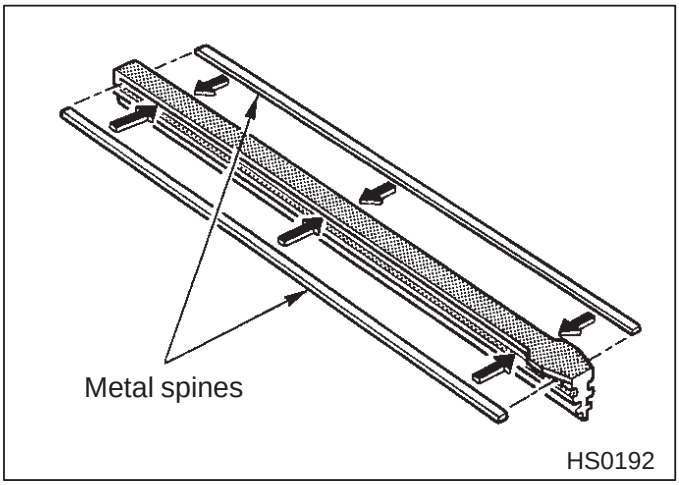

5. Align the claws of the metal support with the grooves in the rubber and slide the blade rubber assembly into the metal support until it locks. Be sure to position the claws at the end of the metal support between the stoppers on the rubber as shown. If the rubber is not retained properly, the wiper blade may scratch the windshield.

– CONTINUED –

Downloaded from www.Manualslib.com manuals search engine

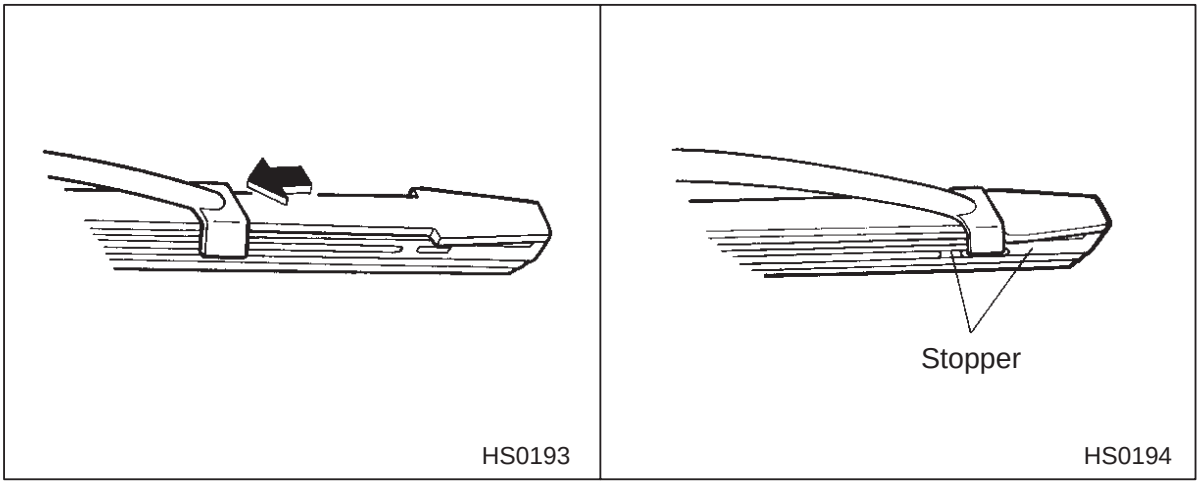

6. Install the wiper blade assembly to the wiper arm. Make sure that it locks in place.
7. Lower the wiper arm.

Brake pedal

Check the brake pedal free play and reserve distance according to the maintenance schedule in the warranty and maintenance booklet.

■ Checking the brake pedal free play

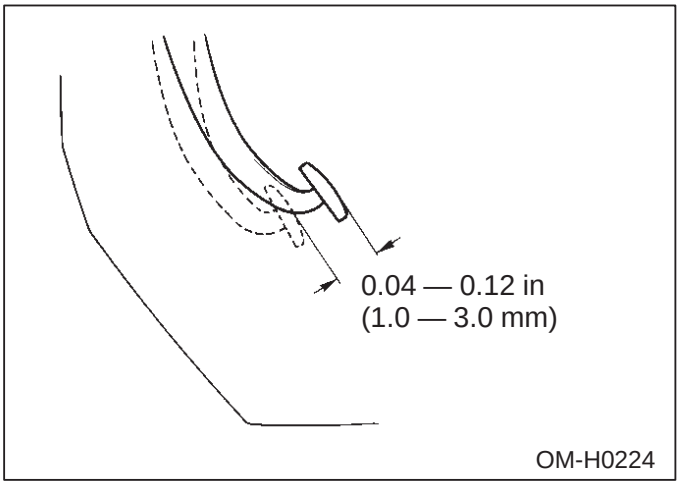

Stop the engine and firmly depress the brake pedal several times. Lightly press the brake pedal down by finger to check the free play with a force of less than 10 N (2 lb, 1 kg).

Downloaded from www.Manualslib.com manuals search engine

If the free play is not within proper specification, contact your SUBARU dealer.

■ Checking the brake pedal reserve distance

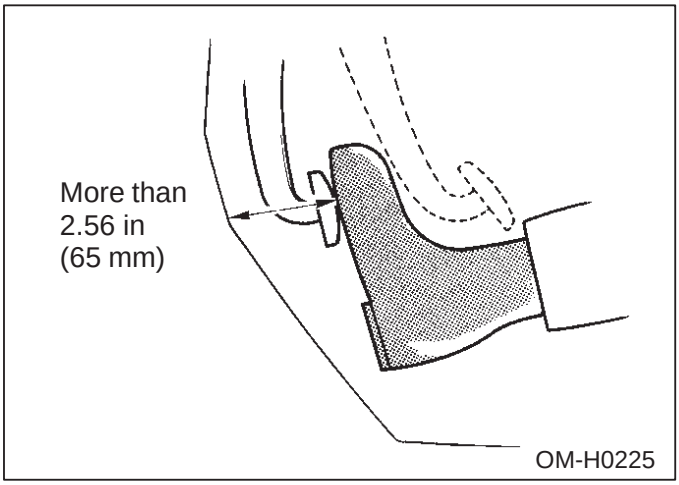

Depress the pedal with a force of approximately 294 N (66 lb, 30 kg) and measure the distance between the upper surface of the pedal pad and the floor.
When the measurement is smaller than the specification, or when the pedal does not operate smoothly, contact with your SUBARU dealer.

Clutch pedal (Manual transmission)

Check the clutch pedal free play and reserve distance according to the maintenance schedule in the warranty and maintenance booklet.

■ Checking the clutch function

Check the clutch engagement and disengagement.
1. With the engine idling, check that there are no abnormal noises when the clutch pedal is depressed, and that shifting into 1st or reverse feels smooth.
2. Start the vehicle by releasing the pedal slowly to check that the engine and transmission smoothly couple without any sign of slippage.

– CONTINUED –

Downloaded from www.Manualslib.com manuals search engine

■ Checking the clutch pedal free play

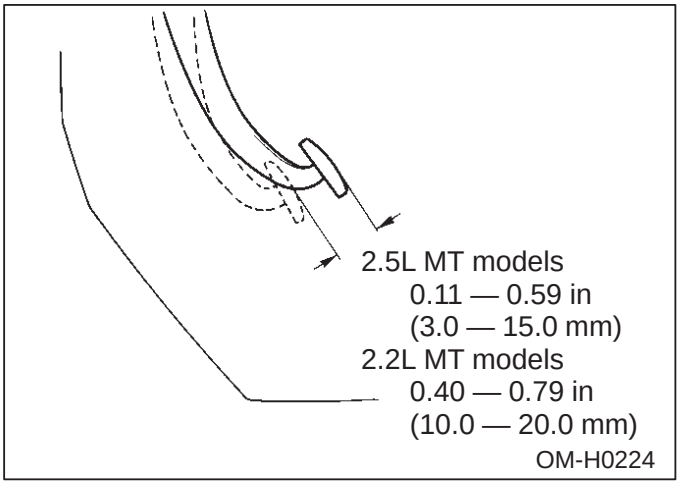

Lightly press the clutch pedal down with your finger until you feel resistance, and check the free play.
If the free play is not within proper specification, contact your SUBARU dealer.

Hill holder (Manual transmission — if equipped)

Ensure that the hill holder operates properly under the following circumstances:
1. Stop the vehicle on an uphill grade by depressing the brake pedal and clutch pedal, with the engine running.
2. Make sure that the vehicle does not move backward even after the brake pedal is released.
3. Then make sure the vehicle starts climbing the grade by following the normal starting procedures.

If the hill holder does not operate as described above, contact with your SUBARU dealer.

Downloaded from www.Manualslib.com manuals search engine

Replacement of brake pad and lining

■ Audible brake pad wear indicator

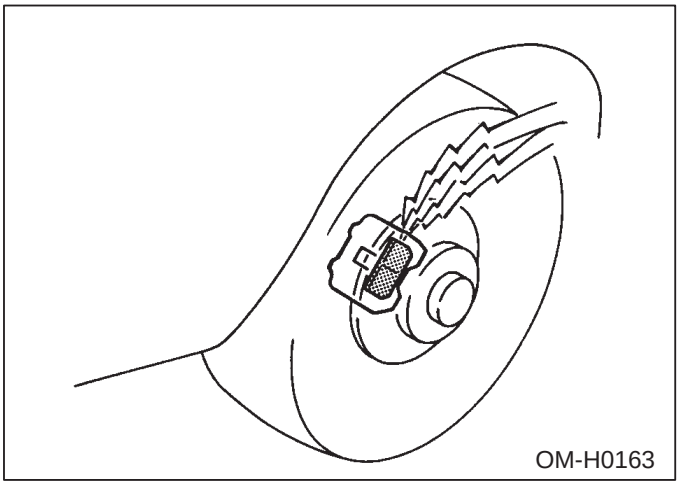

The front disc brakes and the right side rear disc brake have audible wear indicators on the brake pads. If the brake pads wear close to their service limit, the wear indicator makes a very audible scraping noise when the brake pedal is applied.

If you hear this scraping noise each time you apply the brake pedal, have the brake pads serviced by your SUBARU dealer as soon as possible.

> ⚠ **CAUTION**
> **If you continue to drive despite the scraping noise from the audible brake pad wear indicator, it will result in the need for costly brake rotor repair or replacement.**

■ Breaking-in of new brake pads and linings

When replacing the brake pad or lining, use only genuine SUBARU parts. After replacement, the new parts must be broken in as follows:

▼ Brake pad and lining

While maintaining a speed of 30 to 40 mph (50 to 65 km/h), step on the brake pedal lightly. Repeat this five or more times.

– CONTINUED –

Downloaded from www.Manualslib.com manuals search engine

▼ Parking brake lining

⚠ WARNING

A safe location and situation should be selected for break-in driving.

⚠ CAUTION

Pulling the parking brake lever too forcefully may cause the rear wheels to lock. To avoid this, be certain to pull the lever up slowly and gently.

1. Drive the vehicle at a speed of about 22 mph (35 km/h).
2. With the parking brake release button pushed in, pull the parking brake lever SLOWLY and GENTLY. (Pulling with a force of approximately 147 N [33 lb, 15 kg].)
3. Drive the vehicle for about 220 yards (200 meters) in this condition.
4. Wait 5 to 10 minutes for the parking brake to cool down. Repeat this procedure again.
5. Check the parking brake stroke. If the parking brake stroke is out of the specified range, adjust it by turning the adjusting nut located on the parking brake lever.

Parking brake stroke: 7 — 8 notches / 196 N (44 lb, 20 kg)

Downloaded from www.Manualslib.com manuals search engine

Parking brake stroke

Check the parking brake stroke according to the maintenance schedule in the warranty and maintenance booklet. When the parking brake is properly adjusted, braking power is fully applied by pulling the lever up seven to eight notches gently but firmly (about 196 N, 44 lb, 20 kg). If the parking brake lever stroke is not within the specified range, have the brake system checked and adjusted at your SUBARU dealer.

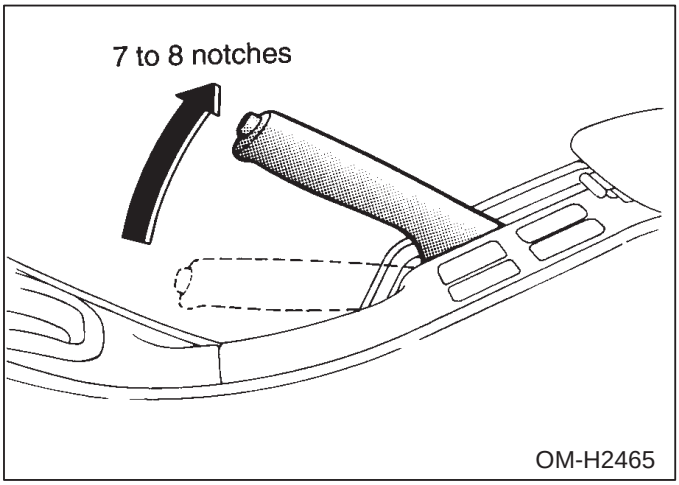

Tires and wheel

■ Inspection and rotation

⚠ WARNING

- **When replacing a tire, make sure you use only the same size, construction, brand, and load range as the original tires listed on the tire placard. Using other sizes or construction may result in severe mechanical damage to the drivetrain of your vehicle and may affect ride, handling, braking, speedometer/odometer calibration, and clearance between the body and tires. It also may be dangerous and lead to loss of vehicle control.**
- **Do not use a combination of radial, belted bias or bias tires since it may cause dangerous handling characteristics and lead to an accident.**

– CONTINUED –

Downloaded from www.Manualslib.com manuals search engine

- **Do not let air out of warm tires to adjust pressure. Doing so will result in low tire pressure.**

The tires should be checked frequently for proper tire pressure, wear, and cuts.

▼ Checking the tire pressure

For the best balance between fuel economy, tire life, ride comfort, and handling, tire pressure should be maintained in accordance with specifications. Check the tire pressure when the tires are cold. Cold means that the vehicle has been parked for three hours or has been driven less than 1 mile (1.6 km).

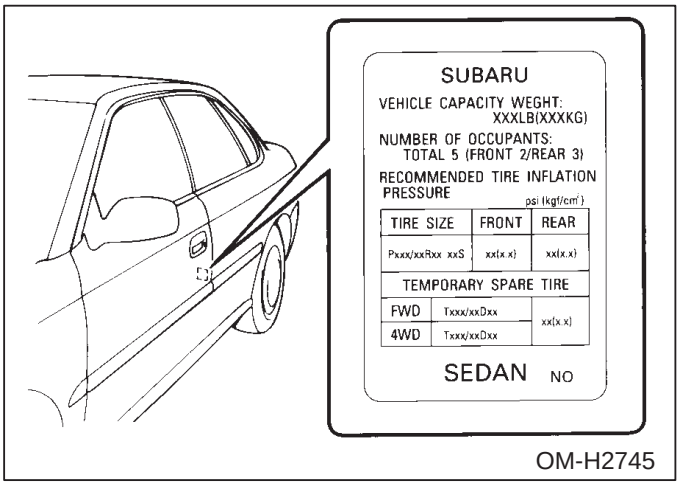

OM-H2745

The recommended tire pressure and sizes are provided on the tire inflation pressure label, which is located under the door latch on the driver's side.

Tire wear will vary with each wheel. To increase the life of tires and keep wear uniform, it is best to rotate them every 7,500 miles (12,500 km).
When rotating tires, replace any unevenly worn or damaged tire. After rotating the tires, adjust tire pressure and be sure to check wheel nut tightness.

Downloaded from www.Manualslib.com manuals search engine

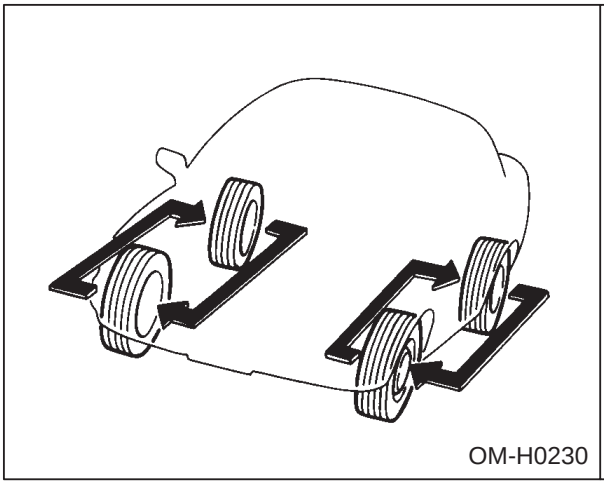

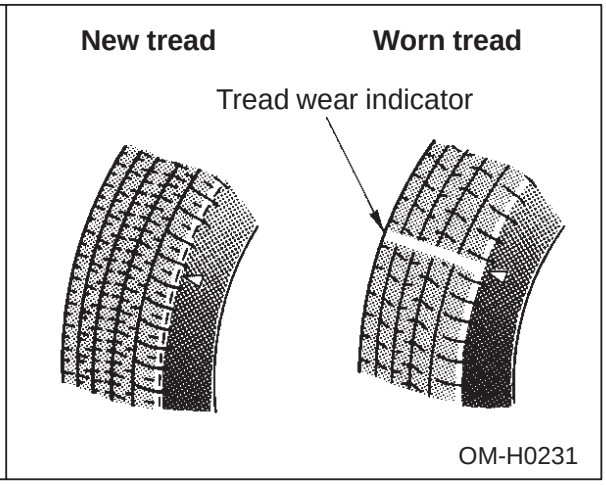

A tire should be replaced when the tread wear indicator appears as a solid band across the tread. The indicators appear when the remaining tread has been worn to 0.063 in (1.6 mm) or less.

■ Wheel covers

▼ Removing the wheel cover

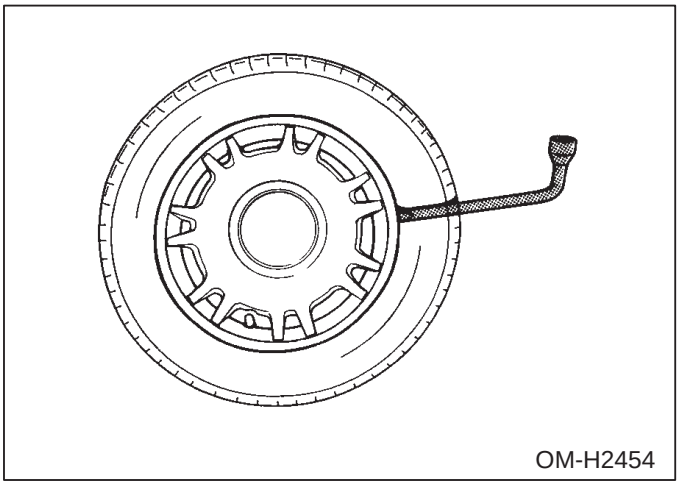

Insert the wheel nut wrench into the notch provided, and pry the wheel cover off.

– CONTINUED –

Downloaded from www.Manualslib.com manuals search engine

▼ Installing the wheel cover

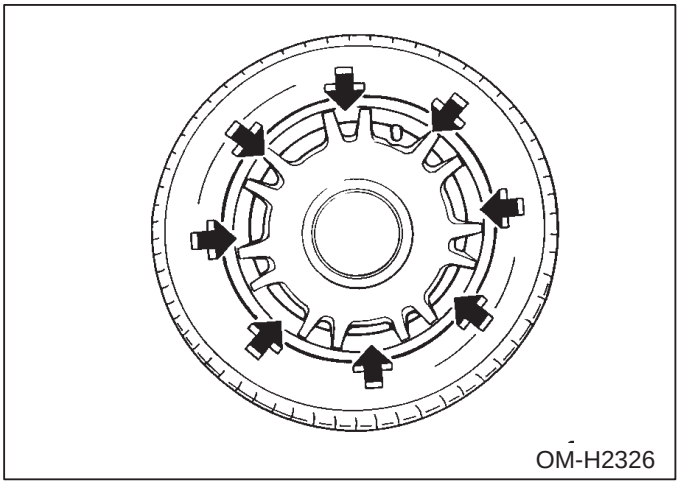

Align the valve with the valve hole in the cover, then fit the cover on the wheel by tapping your hand evenly around the circumference of the cover.

NOTE

When any of the wheels is removed and replaced for tire rotation or to change a flat tire, always check the tightness of the wheel nuts after driving approximately 600 miles (1,000 km). If any nut is loose, tighten it to the specified torque.

Aluminum wheels (If equipped)

Aluminum wheels can be scratched and damaged easily. Handle them carefully to maintain their appearance, performance, and safety.

- When any of the wheels is removed and replaced for tire rotation or to change a flat, always check the tightness of the wheel nuts after driving approximatly 600 miles (1,000 km). If any nut is loose, tighten it to the specified torque.
- Never apply oil to the threaded parts, wheel nuts, or tapered surface of the wheel.
- Never let the wheel rub against sharp protrusions or curbs.
- Be sure to fit tire chains on uniformly and completely around the tire, otherwise the chains may scratch the wheel.
- When wheel nuts, balance weights, or the center cap are replaced,

Downloaded from www.Manualslib.com manuals search engine

be sure to replace them with genuine SUBARU parts designed for aluminum wheels.

Fuses

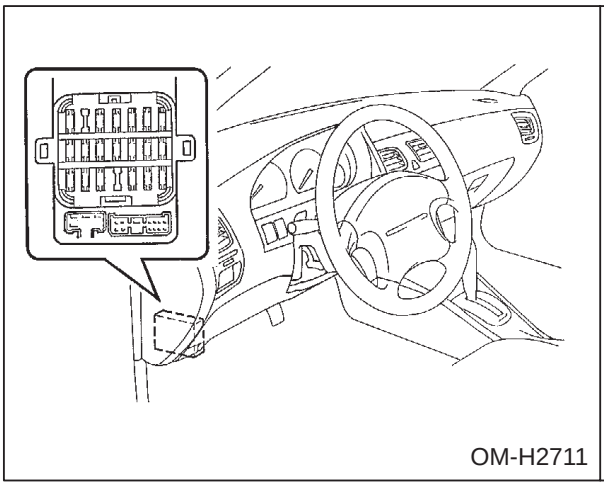
OM-H2711

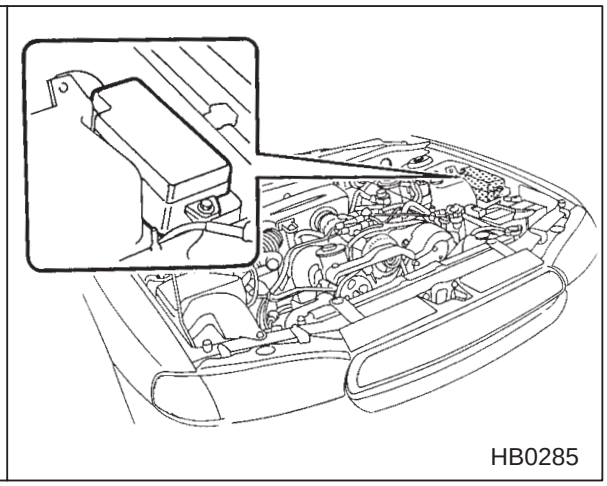
HB0285

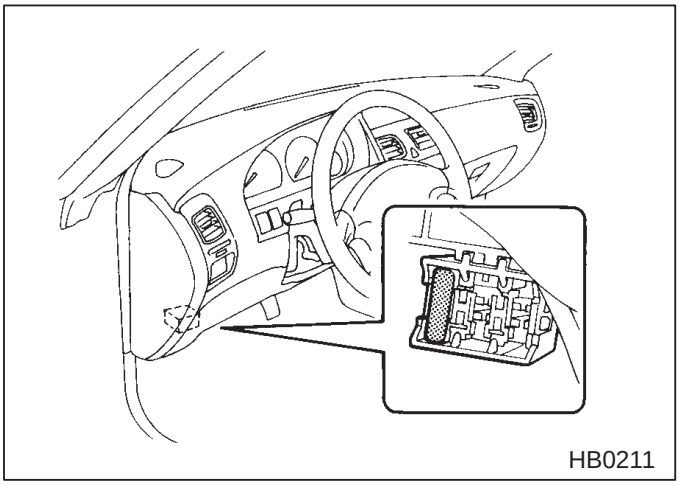
HB0211

The fuses are designed to melt during an overload to prevent damage to the wiring harness and electrical equipment. The fuses are located in three fuse boxes.
If any lights, accessories or other electrical controls do not operate, inspect the corresponding fuse. If a fuse has blown, replace it.

– CONTINUED –

Downloaded from www.Manualslib.com manuals search engine

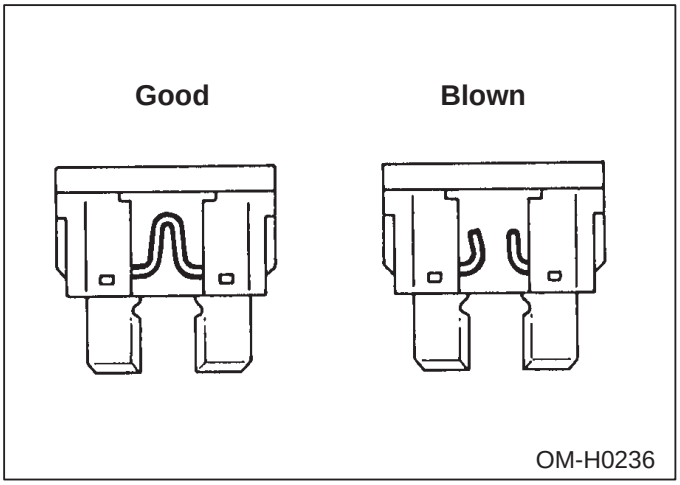

■ Replacing a fuse

⚠ CAUTION

Never replace a fuse with one having a higher rating or with material other than a fuse because serious damage or a fire could result.

▼ Fuse box

1. Turn the ignition switch to the “LOCK” position and turn off all electrical accessories.
2. Determine which fuse may be blown. The fuse box lids and the Fuse and circuits section in chapter 11 show the circuit for each fuse.
3. Remove the cover from the fuse box.

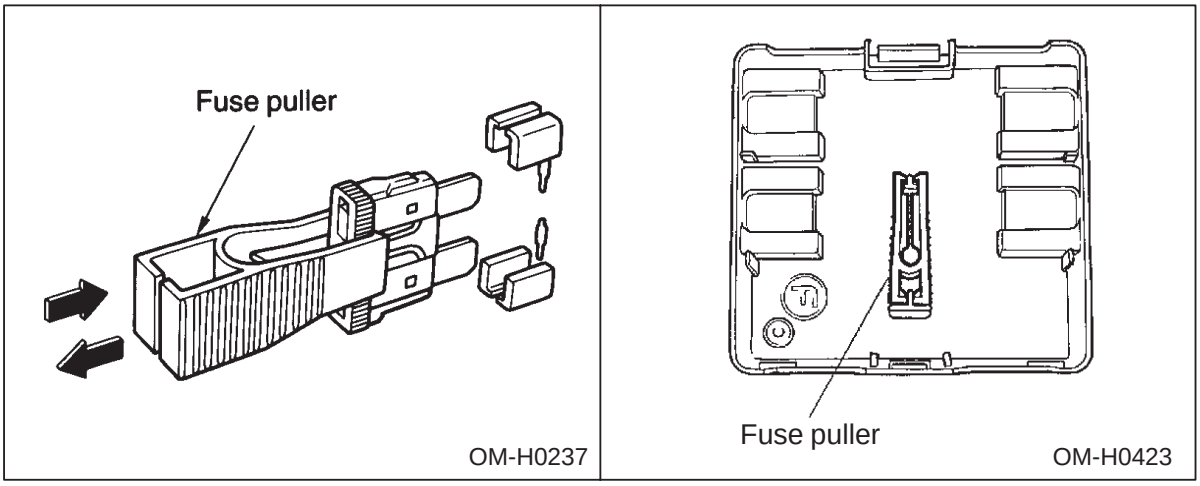

Downloaded from www.Manualslib.com manuals search engine

4. Pull out the fuse with the fuse puller provided in the interior fuse box cover.
5. Inspect the fuse. If it has blown, replace it with a spare fuse of the same rating. The spare fuses are stored in the main fuse box in the engine compartment.

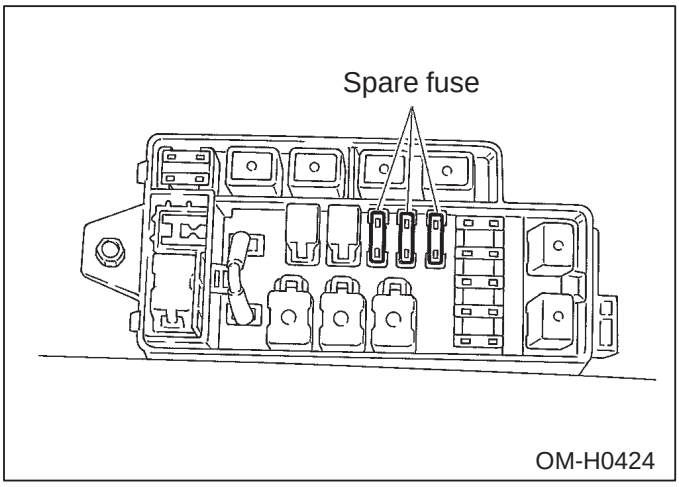

6. If the same fuse blows again, this indicates that its system has a problem. Contact your SUBARU dealer for repairs.

▼ Fuse socket (behind the instrument panel lower cover)

1. Turn the ignition switch to the “LOCK” position and turn off all electrical accessories.
2. Determine which fuse may be blown. Fuse and Circuits section in chapter 11 show the circuit for each fuse.

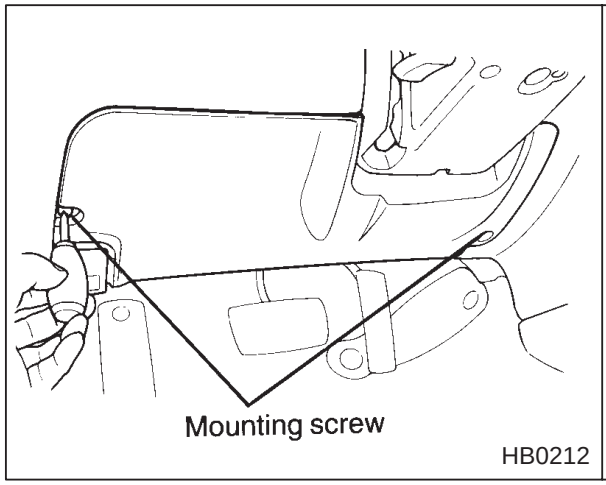

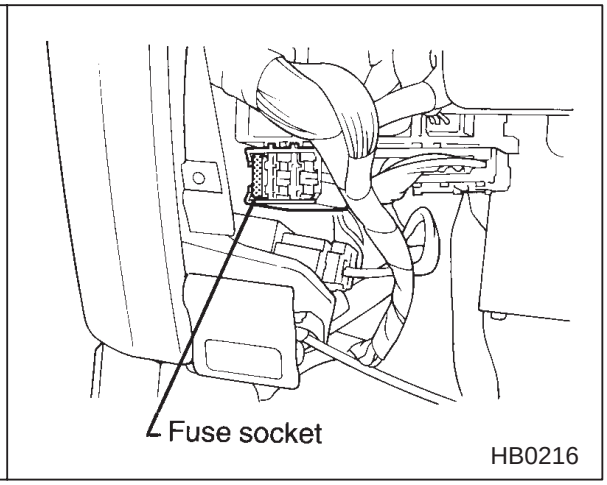

3. Remove the instrument panel lower cover.

– CONTINUED –

Downloaded from www.Manualslib.com manuals search engine

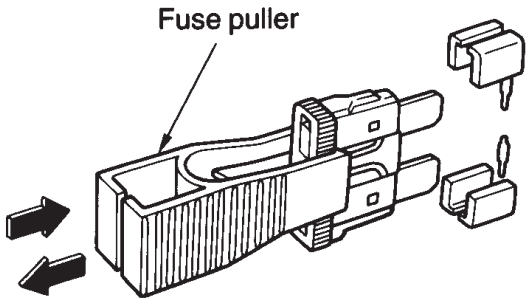

OM-H0237

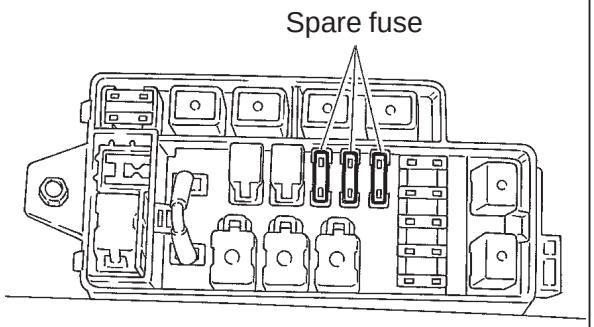

OM-H0424

4. Pull out the fuse with the fuse puller provided in the interior fuse box cover.
5. Inspect the fuse. If it has blown, replace it with a spare fuse of the same rating. The spare fuses are stored in the main fuse box in engine compartment.
6. If the same fuse blows again, this indicates that its system has a problem. Contact your SUBARU dealer for repairs.

Main fuse and fusible link

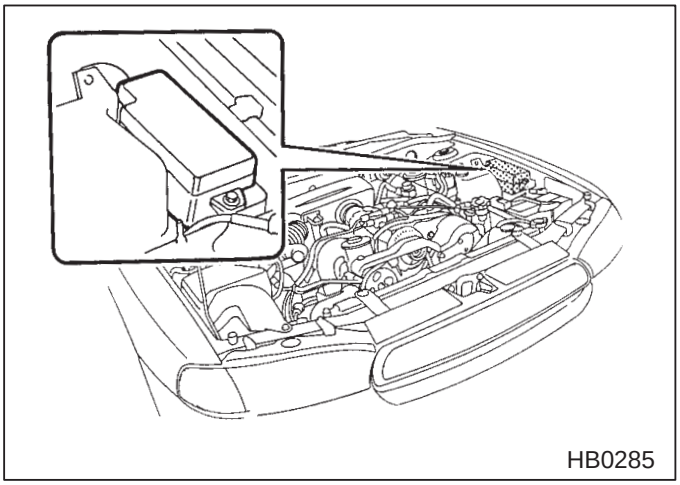

HB0285

The main fuses and fusible link are designed to melt during an overload to prevent damage to the wiring harness and electrical equipment. Check the main fuses and fusible link if any electrical component fails to

Downloaded from www.Manualslib.com manuals search engine

operate (except the starter motor) and other fuses are good. A melted main fuse or fusible link must be replaced. Use only replacements with the same specified rating as the melted main fuse or fusible link. If a main fuse or fusible link blows after it is replaced, have the electrical system checked by your nearest SUBARU dealer.

Installation of accessories

Always consult your SUBARU dealer before installing fog lights or any other electrical equipment in your vehicle. Such accessories may cause the electronic system to malfunction if they are incorrectly installed or if they are not suited for the vehicle.

Downloaded from www.Manualslib.com manuals search engine

Replacing bulbs

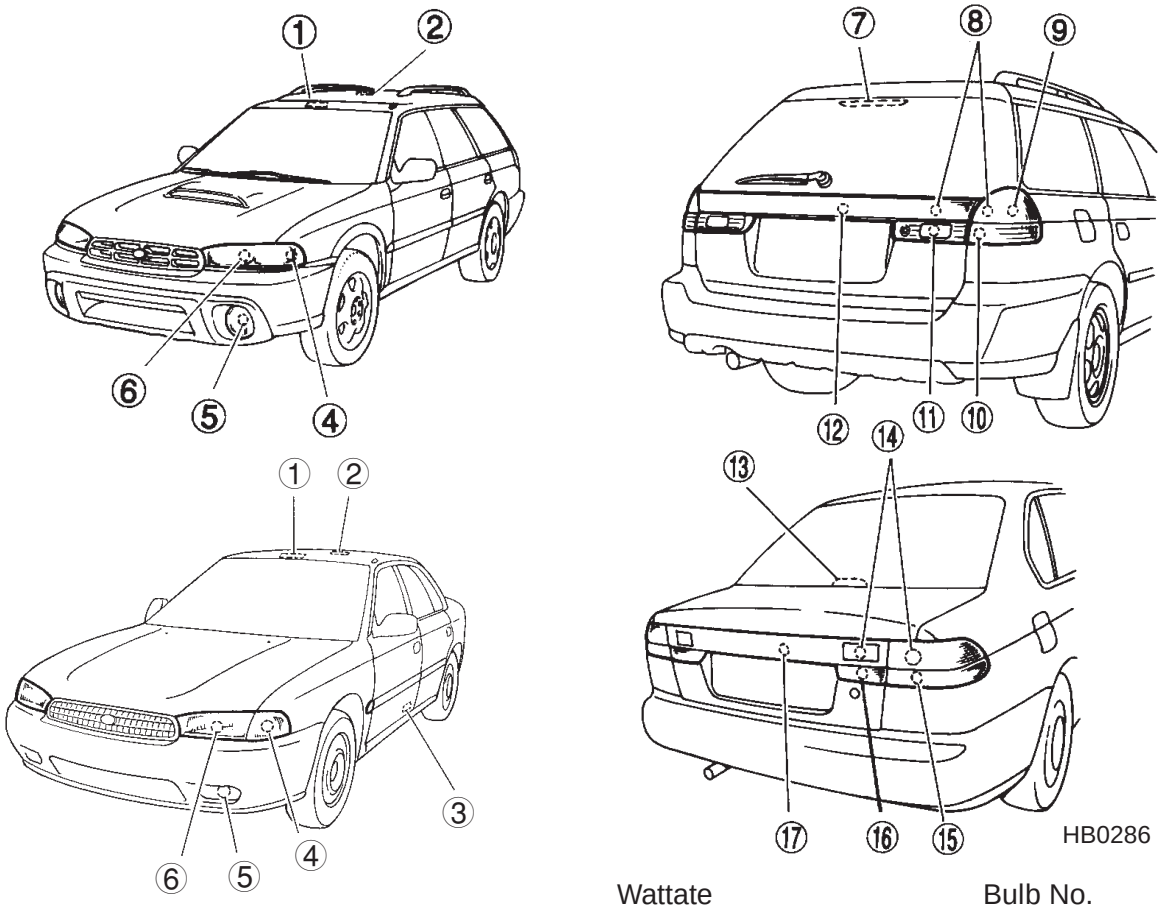

		Wattate	Bulb No.
①	Spot light	(12V-8W)	—
②	Room light	(12V-8W)	—
③	Step light	(12V-3.4W)	—
④	Front turn signal, parking light and front side marker light	(12V-27/8W)	1157
⑤	Fog light (OUTBACK and SUS)	(12V-51W)	9006
	Fog light (GT)	(12V-55W)	H3
⑥	Headlight	(12V-65/55W)	9007 (HB5)
⑦	High mount stop light	(12V-13W)	912
⑧	Brake/tail light	(12V-27/8W)	1157
⑨	Rear side marker light	(12V-5W)	168
⑩	Rear turn signal light	(12V-27W)	1156
⑪	Backup light	(12V-27W)	1156
⑫	License plate light	(12V-3.8W or 5W)	194 or 168
⑬	High mount stop light (except GT models)	(12V-18W)	921
⑭	Brake/tail light	(12V-27/8W)	1157
⑮	Rear turn signal light	(12V-27W)	1156
⑯	Back-up light	(12V-27W)	1156
⑰	License plate light	(12V-3.8W or 5W)	194 or 168

Downloaded from www.Manualslib.com manuals search engine

■ Headlight

⚠ CAUTION

Halogen headlight bulbs become very hot while in use. If you touch the bulb surface with bare hands or greasy gloves, finger prints or grease on the bulb surface develop into hot spots, causing the bulb to break. If there are finger prints or grease on the bulb surface, wipe them away with a soft cloth moistened with alcohol.

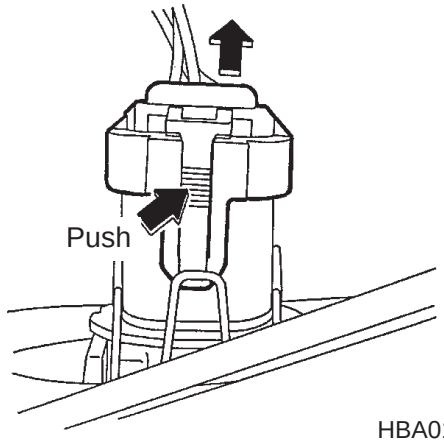

HBA014CB

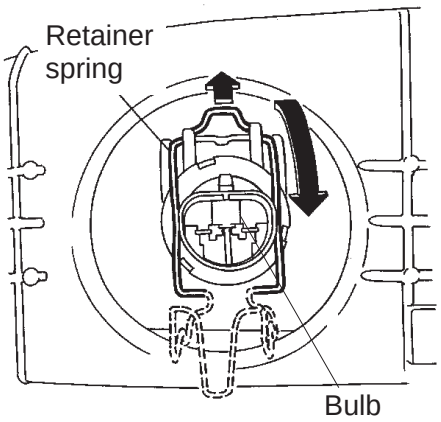

HB0342

1. Disconnect the electrical connector while pushing the lock release tab.
2. Remove the retainer spring.
3. Replace the bulb, then set the retainer spring securely.
4. Reconnect the electrical connector.

■ Fog light (OUTBACK and SUS)

⚠ CAUTION

Halogen light bulbs become very hot while in use. If you touch the bulb surface with bare hands or greasy gloves, finger prints or grease on the bulb surface develop into hot spots, causing the bulb to break. If there are finger prints or grease on the bulb surface, wipe them away with a soft cloth moistened with alcohol.

– CONTINUED –

Downloaded from www.Manualslib.com manuals search engine

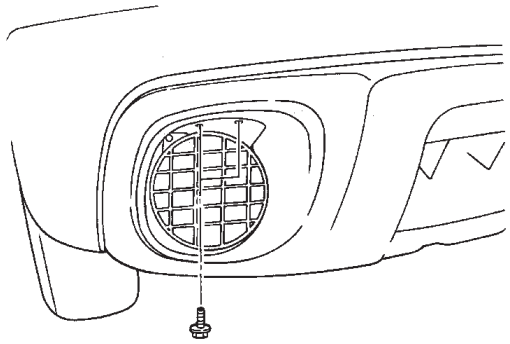

HB0058

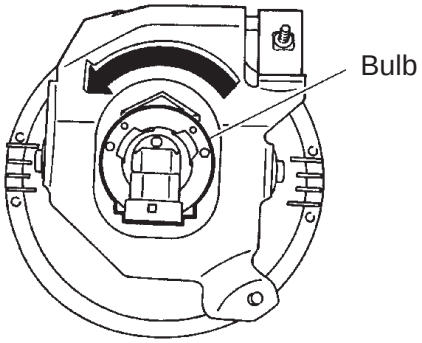

HB0059

1. Remove the front fog light assembly by removing the two bolts.
2. Disconnect the connector.
3. Remove the front fog light bulb by turning it counterclockwise.
4. Replace the bulb with a new one. Then reconnect the connectors and reinstall the removed parts in the reverse order of removal.

■ Fog light (GT)

⚠ CAUTION

Halogen light bulbs become very hot while in use. If you touch the bulb surface with bare hands or greasy gloves, finger prints or grease on the bulb surface develop into hot spots, causing the bulb to break. If there are finger prints or grease on the bulb surface, wipe them away with a soft cloth moistened with alcohol.

Downloaded from www.Manualslib.com manuals search engine

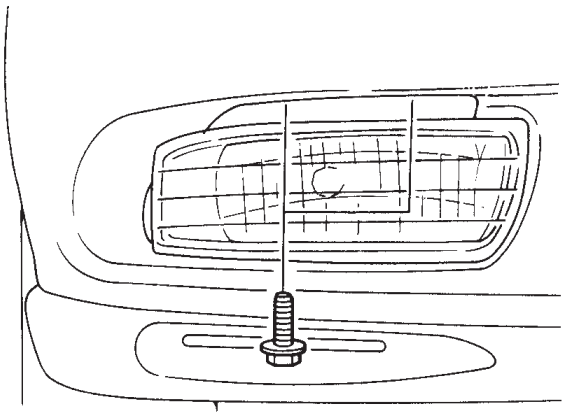
HB0056

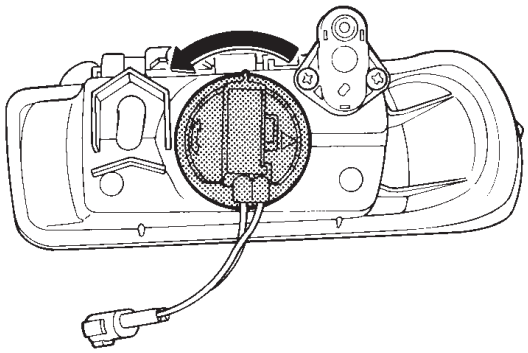
HB0208

1. Remove the front fog light assembly by removing the two bolts.
2. Disconnect the connector.
3. Remove the front fog light case cap by turning it counterclockwise.
4. Disconnect the connector behind the case cap.

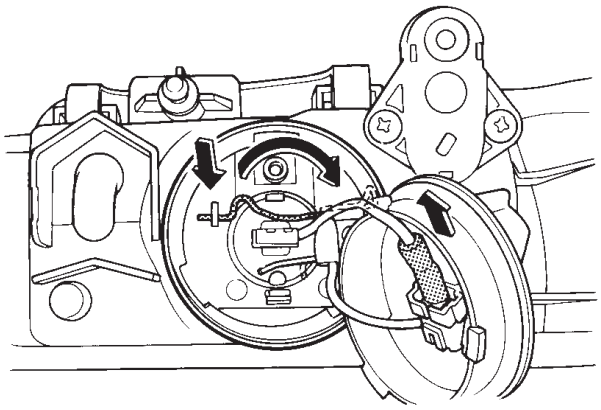
HB0209

5. Release the retainer spring.
6. Replace the bulb with a new one. Then reconnect the connectors and reinstall the removed parts in the reverse order of removal.

– CONTINUED –

Downloaded from www.Manualslib.com manuals search engine

■ Front turn signal, parking light and front side marker light

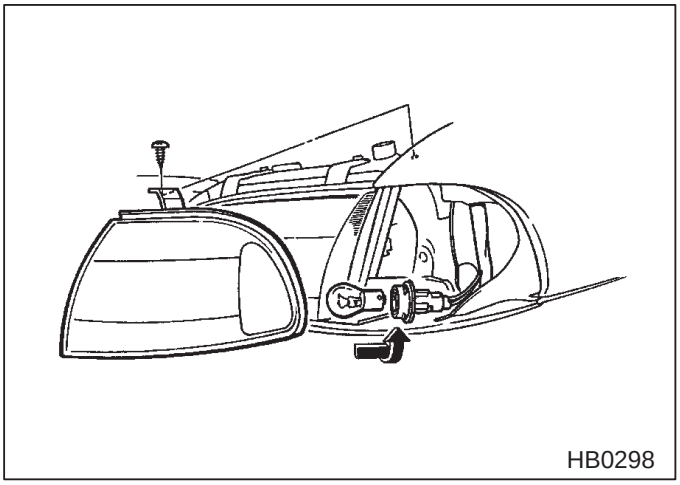

1. Remove the front turn signal light assembly mounting screw located at the top of the headlight assembly using a phillips screwdriver.
2. Move the front turn signal light assembly forward until it pops out from the fender.
3. Remove the bulb holder from the front turn signal light assembly by turning it counterclockwise.
4. Pull the bulb out of the socket. Install a new bulb.
5. Set the bulb holder into the front turn signal light assembly and turn it clockwise until it locks.
6. Set the front turn signal light assembly into the fender. Tighten the mounting screw.

Downloaded from www.Manualslib.com manuals search engine

■ Rear combination lights

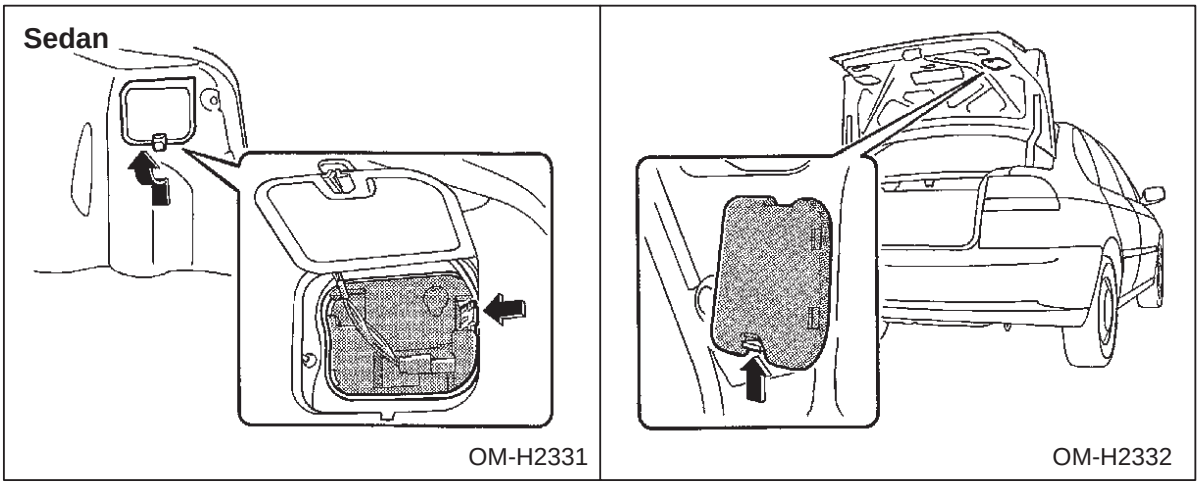

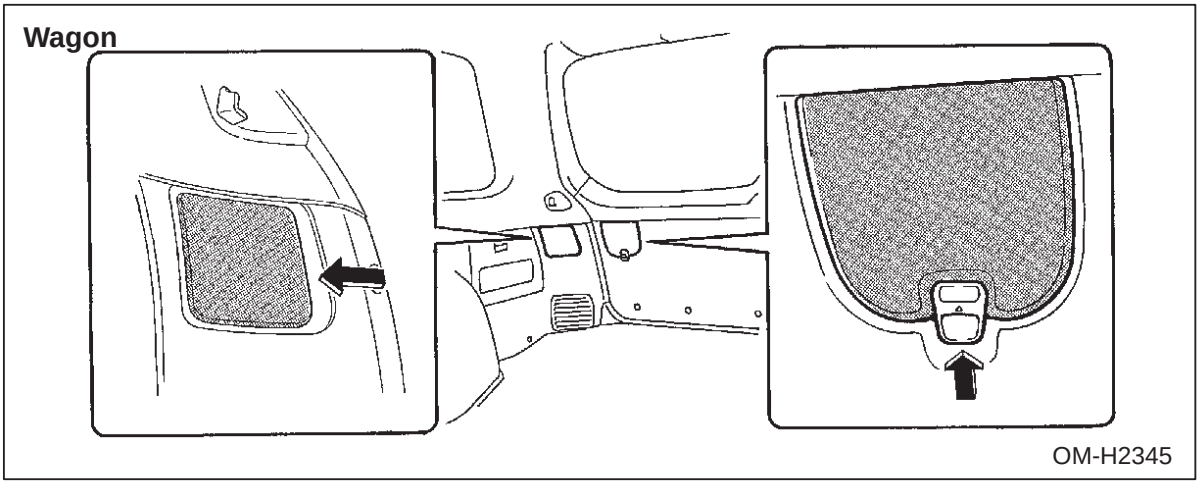

1. Unlatch the rear combination light cover by pulling the knob. Open the cover up.
2. Remove the bulb holder from the rear combination light assembly by turning it counterclockwise.
3. Remove the bulb from the socket by pushing it and turning counter-clockwise. Install a new bulb.
4. Set the bulb holder into the rear combination light assembly and turn it clockwise until it locks.
5. Close the cover and latch the lock.

– CONTINUED –

Downloaded from www.Manualslib.com manuals search engine

License plate light

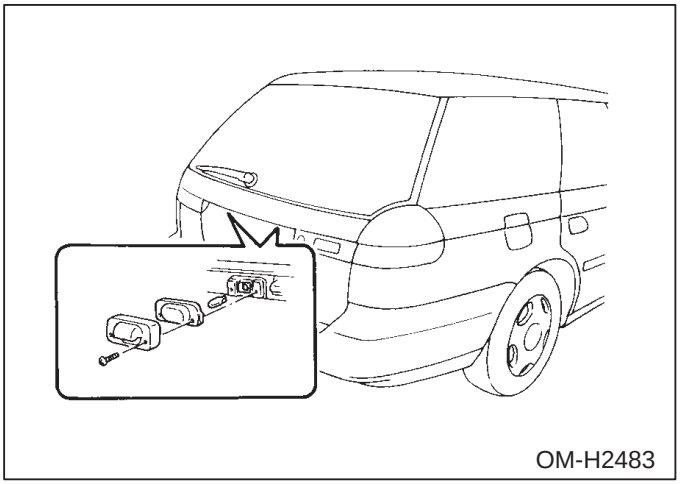

1. Remove the mounting screws using a phillips screwdriver.
2. Remove the cover and lens.
3. Pull the bulb out of the socket. Install a new bulb.
4. Reinstall the lens and cover.
5. Tighten the mounting screws.

Downloaded from www.Manualslib.com manuals search engine

■ Interior light, spot light, luggage compartment light and step light

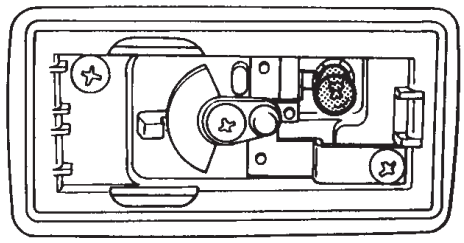
OM-H2475

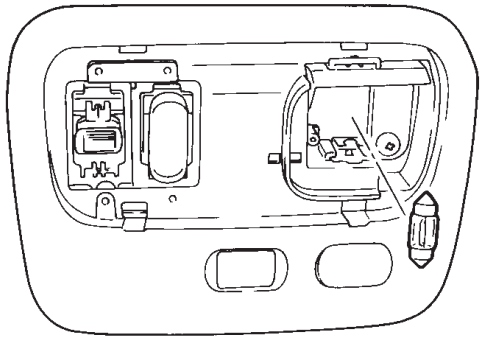
OM-H2476

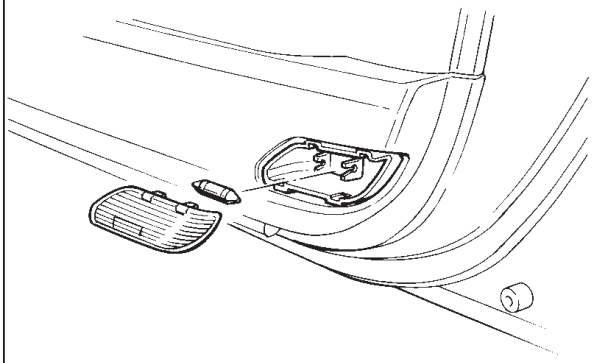
OM-H2749

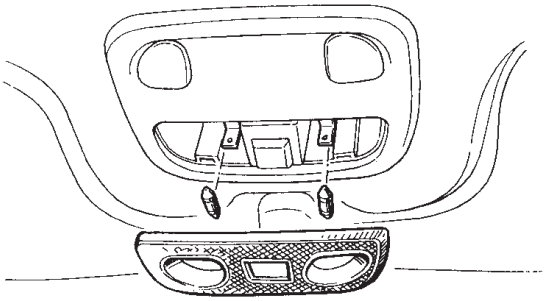
HB0215

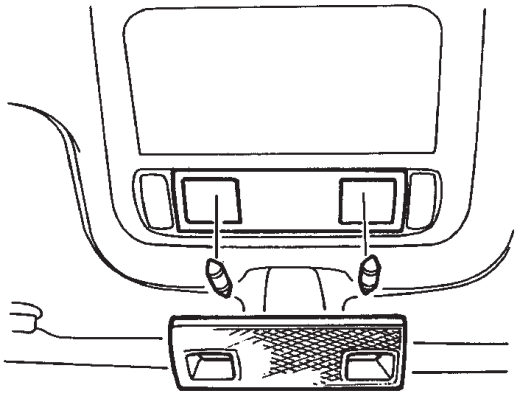
HB0287

1. Remove the lens by prying the edge of the lens with a regular screwdriver.
2. Pull the bulb out of the socket. Install a new bulb.
3. Reinstall the lens.

– CONTINUED –

Downloaded from www.Manualslib.com manuals search engine

■ Trunk light

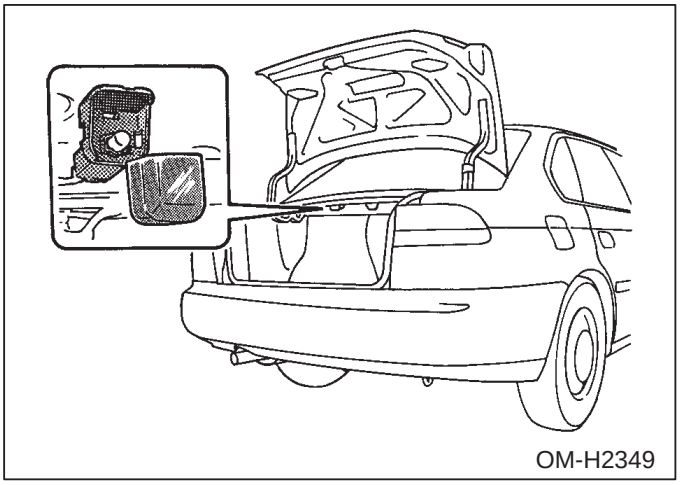

1. Remove the cover by pulling it out.
2. Pull the bulb out of the socket. Install a new bulb.
3. Reinstall the cover.

■ High mount stop light

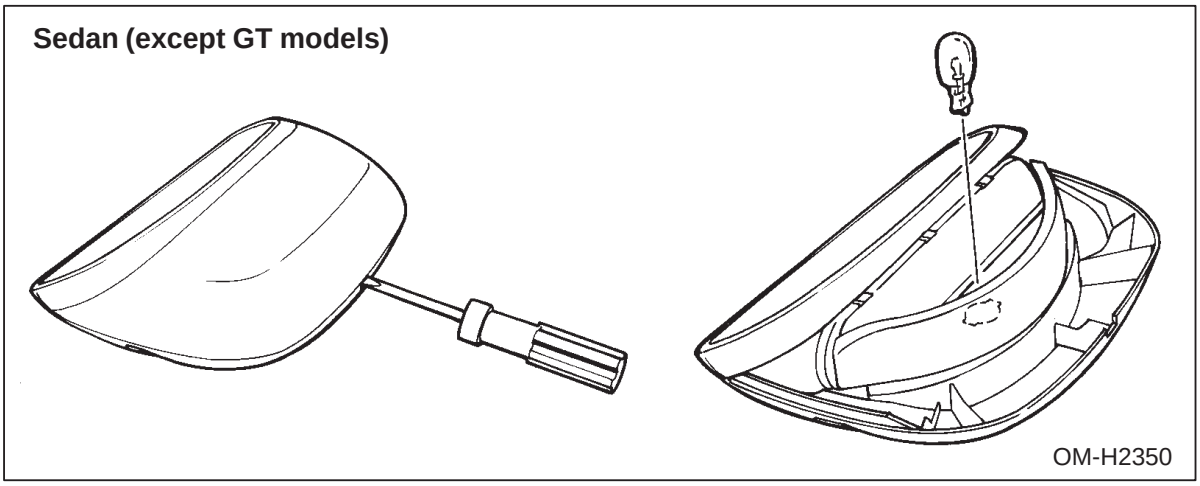

Downloaded from www.Manualslib.com manuals search engine

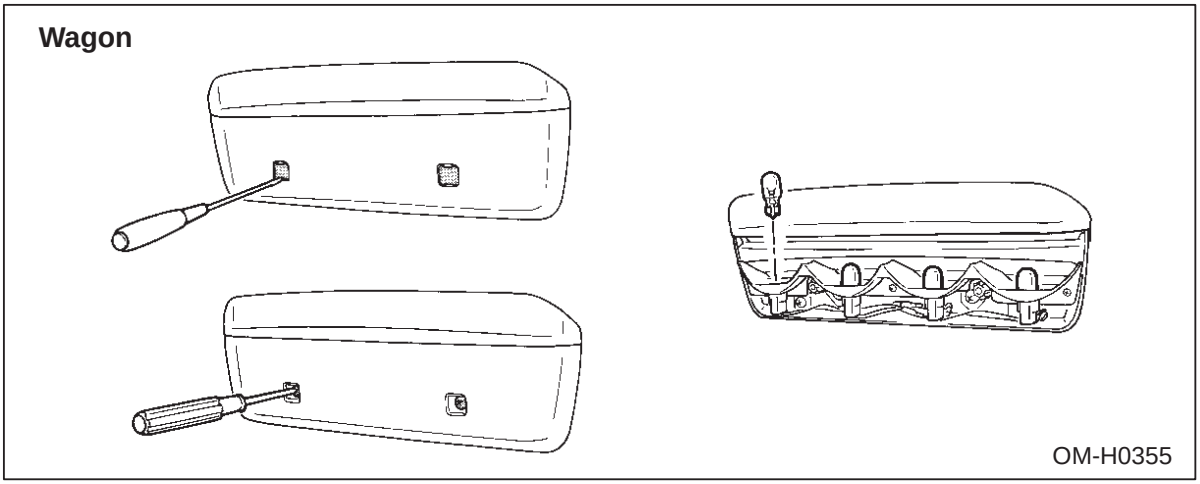

▼ Sedan (except GT models)

1. Remove the high mount stop light cover by prying on the edge with a screwdriver.
2. Pull the bulb out of the socket. Install a new bulb.
3. Reinstall the cover.

▼ Wagon

1. Remove the mounting screw covers by prying on the edge with a screwdriver.
2. Remove the mounting screws using a phillips screwdriver and then remove the high mount stop light cover.
3. Pull the bulb out of the socket. Install a new bulb.
4. Reinstall the cover.
5. Tighten the mounting screws then reinstall the covers.

NOTE

Other bulbs may be difficult for owner to replace. Have your SUBARU dealer replace these bulbs if necessary.

Downloaded from www.Manualslib.com manuals search engine

To install the rear license plate (Wagon)

⚠ CAUTION

Do not use a bolt longer than 12 mm.

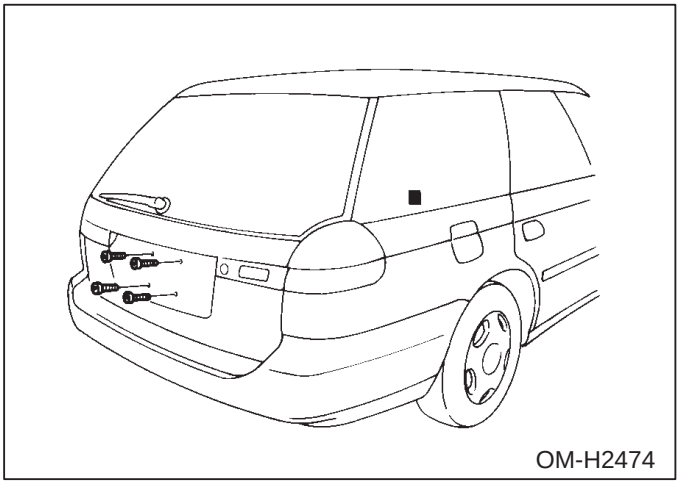

Use M5 x 12 bolts to install a license plate on the rear gate.

Downloaded from www.Manualslib.com manuals search engine

Specifications

Specifications **11-2**
- **Dimensions** **11-2**
- **Engine** **11-3**
- **Electrical system** **11-3**
- **Capacities** **11-4**
- **Tires** **11-4**
- **Wheel alignment** **11-5**

Fuses and circuits **11-6**
- **Fuse panel located under the dashboard** **11-6**
- **Fuse panel behind the instrument panel lower cover** **11-8**
- **Fuse panel located in the engine compartment** **11-9**

Bulb chart **11-10**

Vehicle identification **11-11**

Downloaded from www.Manualslib.com manuals search engine

Specifications

These specifications are subject to change without notice.

Dimensions

Sedan (except SUS)

Overall length	181.5 in. (4,610 mm)
Overall width	67.5 in. (1,715 mm)
Overall height	55.3 in. (1,405 mm)*1
	55.7 in. (1,415 mm)*2
Ground clearance	6.1 in. (155 mm)
Front tread	57.5 in. (1,460 mm)
Rear tread	57.3 in. (1,455 mm)
Wheelbase	103.5 in. (2,630 mm)

Wagon (except OUTBACK)

Overall length	184.4 in. (4,685 mm)
Overall width	67.5 in. (1,715 mm)
Overall height	57.1 in. (1,450 mm)*3
	57.5 in. (1,460 mm)*4
Ground clearance	6.1 in. (155 mm)
Front tread	57.5 in. (1,460 mm)
Rear tread	57.3 in. (1,455 mm)
Wheelbase	103.5 in. (2,630 mm)

SUS

Overall length	182.5 in. (4,635 mm)
Overall width	67.5 in. (1,715 mm)
Overall height	57.9 in. (1,470 mm)
Ground clearance	7.3 in. (185 mm)
Front tread	57.3 in. (1,455 mm)
Rear tread	57.1 in. (1,450 mm)
Wheelbase	103.5 in. (2,630 mm)

OUTBACK

Overall length	185.8 in. (4,720 mm)
Overall width	67.5 in. (1,715 mm)
Overall height	61.2 in. (1,555 mm)

Downloaded from www.Manualslib.com manuals search engine

Ground clearance	7.3 in. (185 mm)
Front tread	57.3 in. (1,455 mm)
Rear tread	57.1 in. (1,450 mm)
Wheelbase	103.5 in. (2,630 mm)

*1: Sedan except GT
*2: Sedan GT
*3: Wagon except GT
*4: Wagon GT

Engine

2.5 Liter models

Engine model	EJ25D
Engine type	Horizontally opposed, liquid cooled 4 cylinder, 4 stroke gasoline engine
Engine displacement	149.9 cu in. (2,457 cc)
Bore	3.92 in. (99.5 mm)
Stroke	3.11 in. (79.0 mm)
Compression ratio	9.7 : 1
Firing order	1 - 3 - 2 - 4

2.2 Liter models

Engine model	EJ221, EJ223
Engine type	Horizontally opposed, liquid cooled 4 cylinder, 4 stroke gasoline engine
Engine displacement	135.0 cu in. (2,212 cc)
Bore	3.82 in. (96.9 mm)
Stroke	2.95 in. (75.0 mm)
Compression ratio	10.0 : 1
Firing order	1 - 3 - 2 - 4

Electrical system

Battery		
Reserve capacity		MT: 90 min., AT: 110 min.
Cold cranking ampere		MT: 430 amp., AT: 490 amp.
Alternator		12V - 85A
Spark plugs	2.2 Liter models	RC10YC4 (Champion) [Alternate] BKR5E-11 (NGK)

– CONTINUED –

Downloaded from www.Manualslib.com manuals search engine

	2.5 Liter models	PFR5B-11 (NGK)
		[Alternate]
		RC10P4A (Champion)
Spark plug gap		0.039 to 0.043 in. (1.0 to 1.1 mm)

Capacities

2.5 Liter models

Fuel tank	15.9 US gal (60 liter, 13.2 Imp gal)
Engine oil	4.7 US qt (4.5 liter, 3.9 Imp qt)
Transmission oil	3.7 US qt (3.5 liter, 3.1 Imp qt)
Automatic transmission fluid	9.8 US qt (9.3 liter, 8.2 Imp qt)
AT differential gear oil	1.3 US qt (1.2 liter, 1.1 Imp qt)
AWD rear differential gear oil	0.8 US qt (0.8 liter, 0.7 Imp qt)
Power steering fluid	0.7 US qt (0.7 liter, 0.6 Imp qt)
Engine coolant	6.3 US qt (6.0 liter, 5.3 Imp qt)

2.2 Liter models

Fuel tank	15.9 US gal (60 liter, 13.2 Imp gal)
Engine oil	4.2 US qt (4.0 liter, 3.5 Imp qt)
Transmission oil	3.7 US qt (3.5 liter, 3.1 Imp qt)
Automatic transmission fluid	9.8 US qt (9.3 liter, 8.2 Imp qt)
AT differential gear oil	1.3 US qt (1.2 liter, 1.1 Imp qt)
AWD rear differential gear oil	0.8 US qt (0.8 liter, 0.7 Imp qt)
Power steering fluid	0.7 US qt (0.7 liter, 0.6 Imp qt)
Engine coolant	6.2 US qt (5.8 liter, 5.2 Imp qt)

Tires

All models except OUTBACK and SUS

Type		Steel belted radial, Tubeless
Size	Brighton, POST	P185/70 R14 87S
	LS, L+	P195/60 R15 87H
	GT	P205/55 R16 87H
	Temporary spare	T135/70D16*5
Pressure	Front	32 psi (220 kPa, 2.2 kg/cm^2)
	Rear	30 psi (210 kPa, 2.1 kg/cm^2)
	Temporary spare	60 psi (420 kPa, 4.2 kg/cm^2)

Downloaded from www.Manualslib.com manuals search engine

Wheel size	Brighton, POST	14 x $5^1/_2$JJ
	LS, L^+	15 x 6JJ
	GT	16 x $6^1/_2$JJ

OUTBACK and SUS

Type		Steel belted radial, Tubeless
Size		P205/70 R15 95S
	Temporary spare	T135/80R16
Pressure	Front	29 psi (200 kPa, 2.0 kg/cm^2)
	Rear	28 psi (190 kPa, 1.9 kg/cm^2)
	Temporary spare	60 psi (420 kPa, 4.2 kg/cm^2)
Trailer towing	Front	29 psi (200 kPa, 2.0 kg/cm^2)
	Rear	32 psi (220 kPa, 2.2 kg/cm^2)
Wheel size		15 x 6JJ

*5: Except POST

Wheel alignment

All models except OUTBACK and SUS

Toe	Front	0 ± 0.12 in. (0 ± 3 mm)
	Rear	0 ± 0.12 in. (0 ± 3 mm)
Camber	Front	–0° 5’
	Rear	–0°55’*6, –1°*7

OUTBACK and SUS

Toe	Front	0 ± 0.12 in. (0 ± 3 mm)
	Rear	0 ± 0.12 in. (0 ± 3 mm)
Camber	Front	0° 20’
	Rear	–0°35’

*6: AWD Wagon
*7: AWD Sedan

Downloaded from www.Manualslib.com manuals search engine

Fuses and circuits

■ Fuse panel located under the dashboard

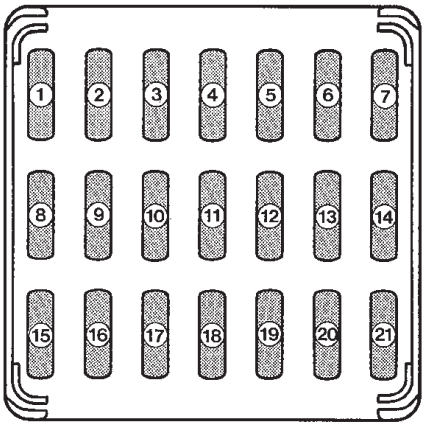

OM-H0253

Fuse panel	Fuse rating	Circuit
1	15A	● Back-up light ● Turn signal light
2	20A	● Windshield wiper and washer
3	20A	● Cigarette lighter socket ● Remote controlled rear view mirrors
4	Empty	
5	10A	● Tail light (right side)
6	15A	● Front fog light
7	20A	● Rear window defogger
8	15A	● SRS AIRBAG
9	10A	● Illumination brightness control
10	Empty	

Downloaded from www.Manualslib.com manuals search engine

Fuse panel	Fuse rating	Circuit
11	20A	● Power door lock ● Keyless entry system
12	20A	● Brake light ● Horn
13	20A	● Cooling fan
14	10A	● Automatic transmission control unit
15	10A	● Meter ● AIRBAG indicator light
16	15A	● Engine ignition system ● SRS AIRBAG
17	15A	● Radio
18	10A	● Cruise control ● ABS control
19	20A	● ABS solenoid
20	15A	● Heater fan
21	15A	● Heater fan

– CONTINUED –

Downloaded from www.Manualslib.com manuals search engine

■ Fuse panel behind the instrument panel lower cover

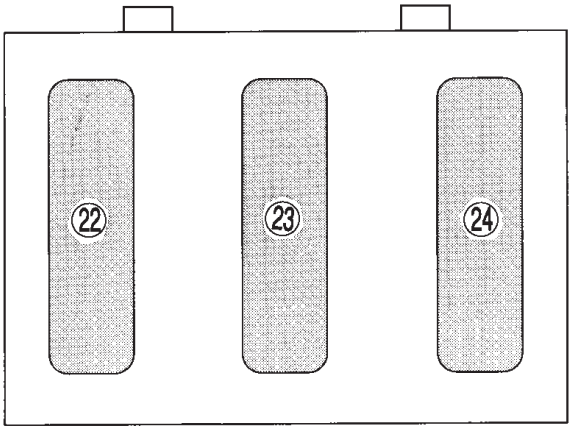

Fuse panel	Fuse rating	Circuit
22	15A*1 or 20A*2	● Accessory power socket ● Seat heater
23	Empty	
24	Empty	

*1: For vehicle with either accessory power socket (in luggage compartment) or seat heater
*2: For vehicle with both seat heater and accessory power socket.

Downloaded from www.Manualslib.com manuals search engine

■ Fuse panel located in the engine compartment

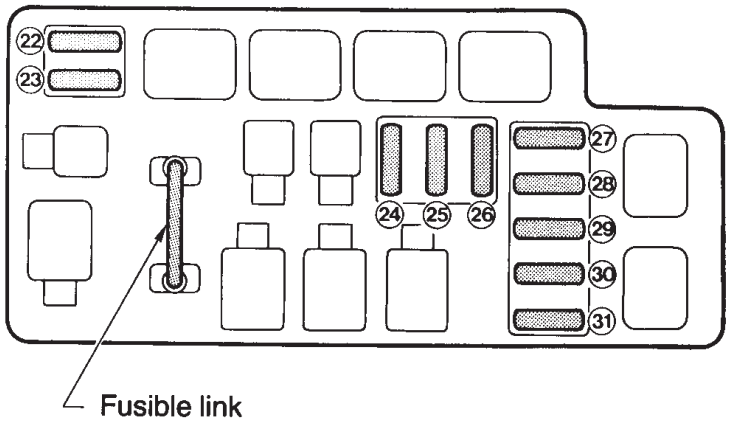

OM-H0254

Fuse panel	Fuse rating	Circuit
25	20A	● Cooling fan
26	10A	● Air conditioner
27	Spare	(Not used)
28	Spare	(Not used)
29	Spare	(Not used)
30	15A	● Hazard warning flasher
31	20A	● Lighting switch
32	15A	● Headlight (left side)
33	15A	● Clock ● Interior light
34	15A	● Headlight (right side)

Downloaded from www.Manualslib.com manuals search engine

Bulb chart

Description	Wattage	Bulb No.
Spot light	12V-8W	—
Room light	12V-8W	—
Luggage area light	12V–13W	—
Step light	12V-3.4W	—
Front turn signal, parking light and front side marker light	12V-27/8W	1157
Fog light (GT)	12V-55W	H3
Fog light (OUTBACK and SUS)	12V-51W	9006
Headlight	12V-65/55W	9007 (HB5)
Brake/tail light	12V-27/8W	1157
Rear side marker light	12V-5W	168
Rear turn signal light	12V-27W	1156
Backup light	12V-27W	1156
High mount stop light		
(Sedan except GT models)	12V-18W	921
(Wagon)	12V-13W	912
License plate light	12V-3.8W or 5W	194 or 168

Downloaded from www.Manualslib.com manuals search engine

Vehicle identification

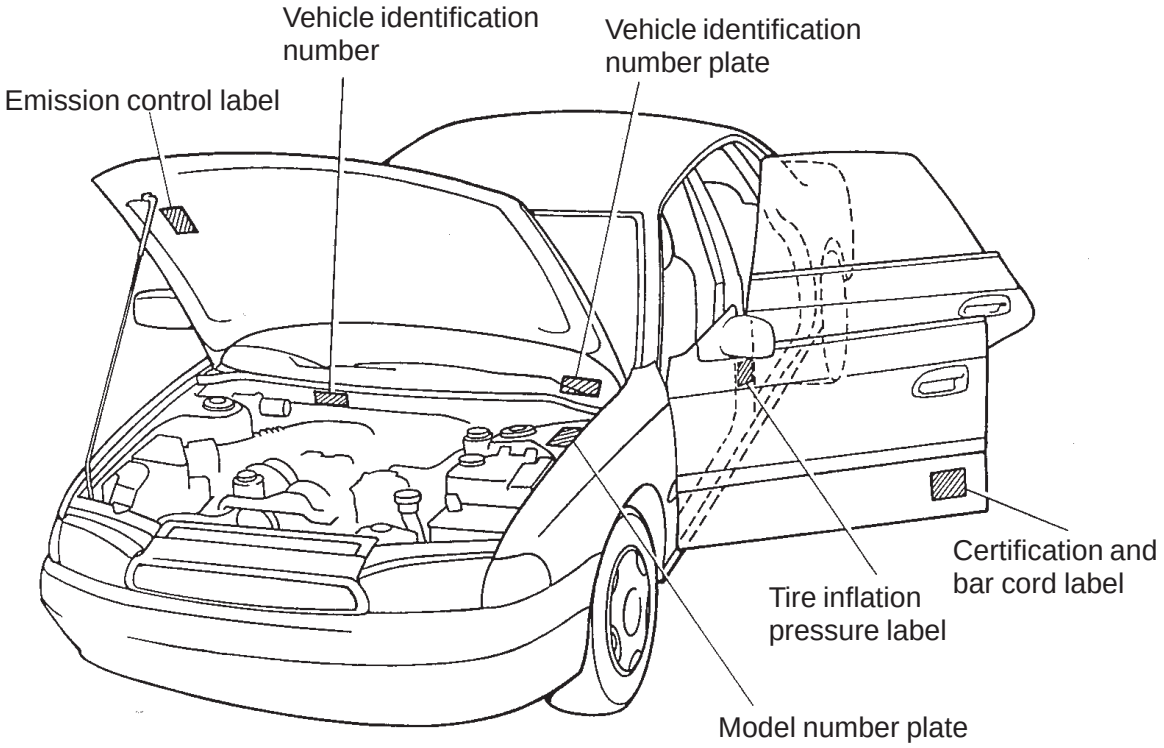

HB0288

Downloaded from www.Manualslib.com manuals search engine

Consumer information and Reporting safety defects

Uniform tire quality grading standards **12-2**
- **Treadwear** **12-2**
- **Traction A, B, C** **12-2**
- **Temperature A, B, C** **12-3**

Reporting safety defects (USA) **12-4**

Downloaded from www.Manualslib.com manuals search engine

For U.S.A.

The following information has been compiled according to Code of Federal Regulations “Title 49, Part 575”.

Uniform tire quality grading standards

This information indicates the relative performance of passenger car tires in the area of treadwear, traction, and temperature resistance. This is to aid the consumer in making an informed choice in the purchase of tires. These grades are molded in the sidewall of the tire and can be interpreted by referring to the following information:

■ Treadwear

The treadwear grade is a comparative rating based on the wear rate of the tire when tested under controlled conditions on a specified government test course.

For example, a tire graded 150 would wear one and one-half (1-1/2) times as well on the government course as a tire graded 100. The relative performance of tires depends upon the actual conditions of their use, however, and may depart significantly from the norm due to variations in driving habits, service practices and differences in road characteristics and climate.

■ Traction A, B, C

The traction grades, from highest to lowest, are A, B and C, and they represent a tire’s ability to stop on wet pavement as measured under controlled conditions on specified government test surfaces of asphalt and concrete. A tire marked C may have poor traction performance.

⚠ WARNING

The traction grade assigned to a tire is based on braking (straightahead) traction tests and does not include cornering (turning) traction.

Downloaded from www.Manualslib.com manuals search engine

■ Temperature A, B, C

The temperature grades are A (highest), B and C, representing the tire's resistance to generation of heat and its ability to dissipate heat when tested under controlled conditions on a specified indoor laboratory test wheel. Sustained high temperature can cause the material of the tire to degenerate and reduce tire life, and excessive temperature can lead to sudden tire failure. Grade C corresponds to a level of performance which all passenger car tires must meet under the Federal Motor Vehicle Safety Standards No. 109. Grades B and A represent higher levels of performance on the laboratory test wheel than the minimum required by law.

⚠ WARNING

The temperature grade for a tire is established for one that is properly inflated and not overloaded. Excessive speed, under inflation or excessive loading, either separately or in combination, can cause heat buildup and possible tire failure.

Downloaded from www.Manualslib.com manuals search engine

Reporting safety defects (USA)

If you believe that your vehicle has a defect which could cause a crash or could cause injury or death, you should immediately inform the National Highway Traffic Safety Administration (NHTSA) in addition to notifying Subaru of America, Inc.

If NHTSA receives similar complaints, it may open an investigation, and if it finds that a safety defect exists in a group of vehicles, it may order a recall and remedy campaign. However, NHTSA cannot become involved in individual problems between you, your dealer, or Subaru of America, Inc. To contact NHTSA, you may either call the Auto Safety Hotline toll-free at 1-800-424-9393 (or 366-0123 in the Washington D.C. area) or write to: NHTSA, U.S. Department of Transportation, Washington, D.C. 20590. You can also obtain other information about motor vehicle safety from the Hotline.

Downloaded from www.Manualslib.com manuals search engine